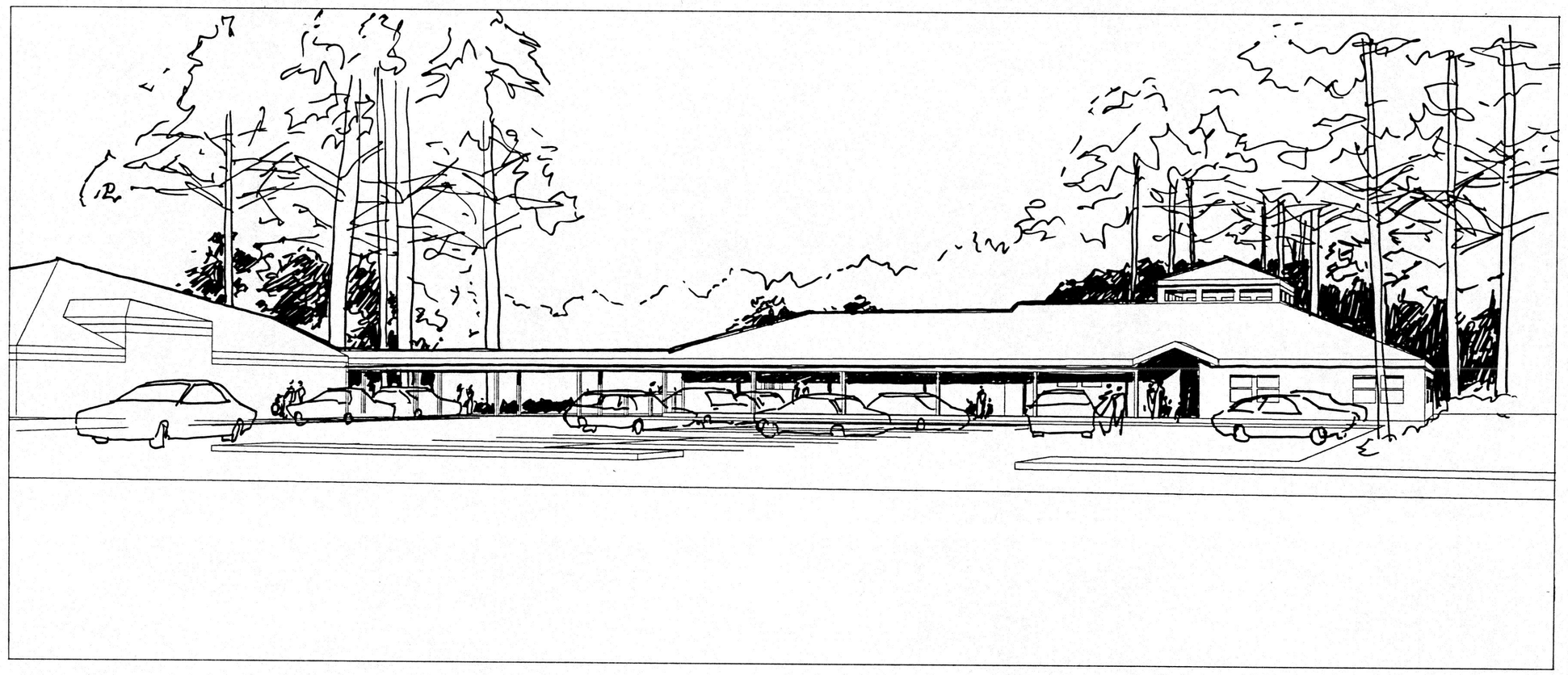

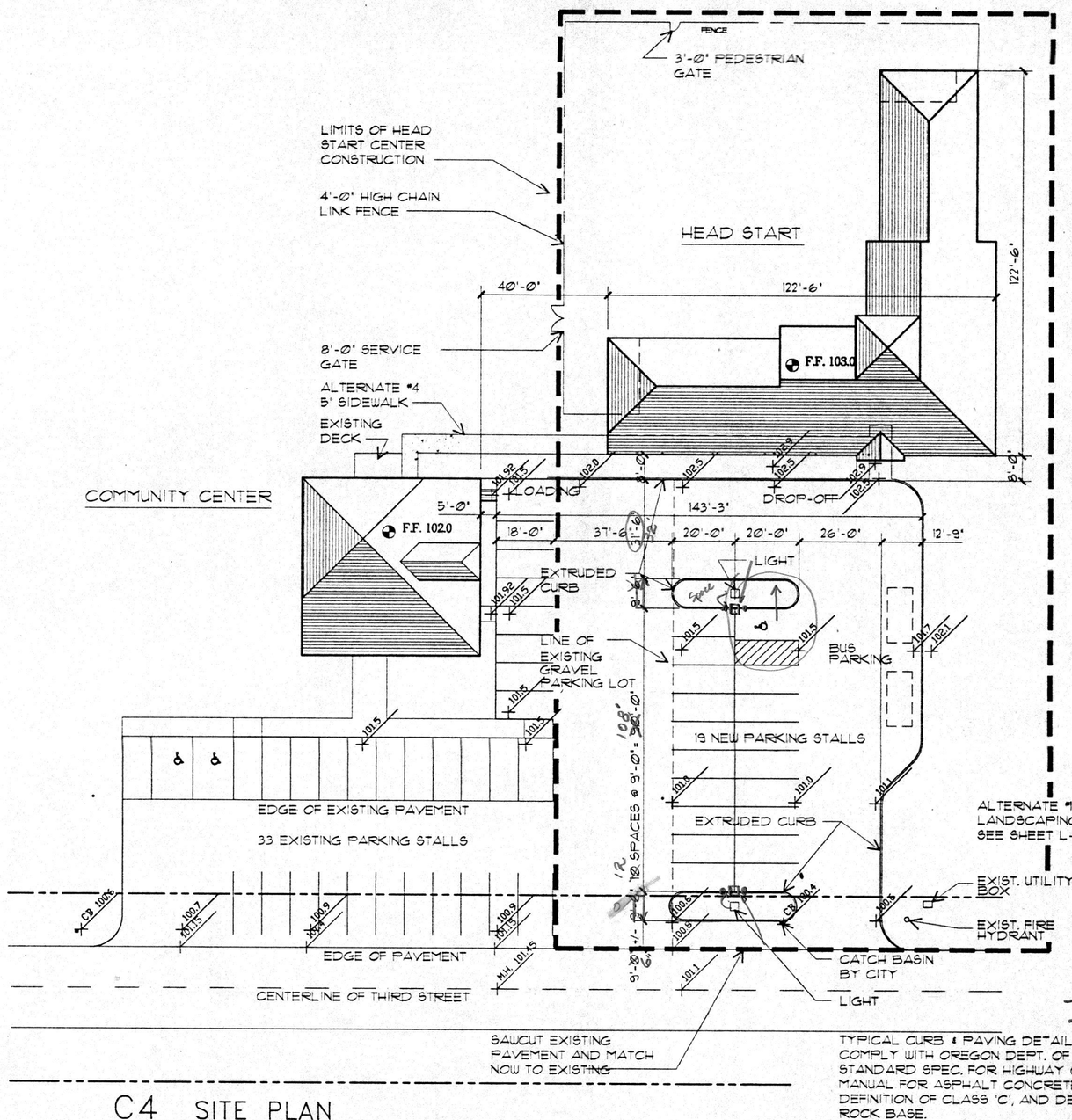

18

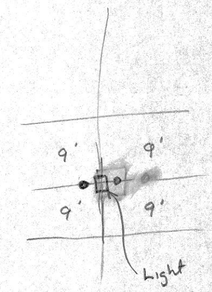

- pick up 4 spaces
- reduce irrigation costs
- need 2-40'x9' landscape areas

TYPICAL CURB & PAVING DETAIL B5/A3 COMPLY WITH OREGON DEPT. OF TRANS. STANDARD SPEC. FOR HIGHWAY CONSTRUCTION MANUAL FOR ASPHALT CONCRETE PAVEMENT (AC) DEFINITION OF CLASS 'C', AND DEFINITION OF ROCK BASE.
CONTRACTOR IS RESPONSIBLE FOR ROUGH GRADING.

C4 SITE PLAN
1" = 30'

ABBREVIATIONS

A.B.	ANCHOR BOLT	FD	FLOOR DRAIN	P.LAM	PLASTIC LAMINATE
ABBR.	ABBREVIATION	FDN	FOUNDATION	PLYD.	PLYWOOD
A.C.	AIR CONDITIONING	F.E.	FIRE EXTINGUISHER	PR.	PAIR
A.D.	AREA DRAIN	F.E.C.	FIRE EXTINGUISHER CABINET	PRPT.	PARAPET
ADJ.	ADJUSTABLE	FIN.	FINISH	P.T.	PRESSURE TREATED
AFL	ABOVE FLOOR LINE	FF.	FINISHED FLOOR		
AGG.	AGGREGATE	FLUOR.	FLUORESCENT	Q.T.	QUARRY TILE
A.H.U.	AIR HANDLING UNIT	F.O.	FURNISHED BY OWNER		
ALT.	ALTERNATE	FOB	FACE OF BRICK	R.	RADIUS
ALUM.	ALUMINUM	FOC	FACE OF CONCRETE	R.A.G.	RETURN AIR GRILLE
AP.	ACCESS PANEL	FOF	FACE OF FINISH	RD.	ROOF DRAIN
		F.O.I.C.	FURNISHED BY OWNER / INSTALLED BY CONTRACTOR	REFR.	REFRIGERATOR
B.	BOTTOM	F.O.I.O.	FURNISHED BY OWNER / INSTALLED BY OWNER	REQ'D.	REQUIRED OR REQUIREMENTS
BD.	BOARD			REV.	REVERSE OR REVISED
BRD.	BIRDLD	FOM	FACE OF MASONRY	R.O.	ROUGH OPENING
BLDG.	BUILDING	FOS	FACE OF STUD	RM.	ROOM
BLKG.	BLOCKING	FP.	FIREPLACE		
BO.	BY OWNER	FRT	FIRE RETARDENT TREATED	S.	SINK
B.O.F.	BOTTOM OF FOOTING	FRMG	FRAMING	SC	SOLID CORE
B.U.	BUILT UP	FTG	FOOTING	SGD	SLIDING GLASS DOOR
				SHF.	SHELF
C.H.	CONDUCTOR HEAD	GA.	GAUGE	SHR	SHOWER
C.J.	CONTROL JOINT	GALV.	GALVANIZED	SHT.	SHEET
CLG.	CEILING	GL.	GLUE LAMINATED BEAM	SIM.	SIMILAR
CLR.	CLEAR	GMU	GLASS MASONRY UNIT	SOG	SLAB ON GRADE
CM.	CEMENT PLASTER	GYP.	GYPSUM	SGL	SAFETY GLASS
COL.	COLUMN			SPEC.	SPECIFICATION
CONC.	CONCRETE			S/R	SHELF AND ROD
CONN.	CONNECTION	HB	HOSE BIB	SQ.	SQUARE
CONT.	CONTINUOUS	HC	HOLLOW CORE	SST	STAINLESS STEEL
C.M.U.	CONCRETE MASONRY UNIT	HDR	HEADER	ST.	STEEL
CPT.	CARPET	HM	HOLLOW METAL	STRCT.	STRUCTURAL
C.S.K.	COUNTERSINK	HORIZ.	HORIZONTAL	SUSP.	SUSPENDED
CT.	CERAMIC TILE	HT.	HEIGHT		
CONT'R	CONTACTOR	HVAC	HEATING, VENTILATING AND AIR CONDITIONING	T.	TOP
				TBR	TO BE REMOVED
DB	DOUBLE			T&G	TOUNGUE AND GROOVE
DET.	DETAIL	JT	JOINT	TH	THRESHOLD
DF.	DRINKING FOUNTAIN			T.O.C.	TOP OF CURB
DIAG.	DIAGONAL	I.D.	INSIDE DIAMETER	T.O.F.	TOP OF FRAMING
DISP.	DISPENSER	INFO.	INFORMATION	T.O.P.	TOP OF PAVING
DN.	DOWN	INSUL.	INSULATION	T.O.S.	TOP OF SLAB
DP	DIMENSION POINT			T.O.W.	TOP OF WALL
DR	DOOR	LAV.	LAVATORY	TS.	TUBE SECTION
DS	DOWNSPOUT	LT.	LIGHT	TYP.	TYPICAL
DWG	DRAWING	LWC	LIGHT WEIGHT CONCRETE		
DW	DISHWASHER			U.O.N.	UNLESS OTHERWISE NOTED
DWR	DRAWER	MANF.	MANUFACTURER		
		MATL.	MATERIAL	VB	VAPOR BARRIER
E.	EXISTING	MAX.	MAXIMUM	VERT.	VERTICAL
EA.	EACH WAY	MECH.	MECHANICAL	VIN.	VINYL
EIFS	EXTERIOR INSULATION AND FINISH SYSTEM	MH	MANHOLE		
		M.O.	MASONRY OPENING	WC	WATER CLOSET
E.W.	EACH WAY	MIN.	MINIMUM	WD	WOOD
ELEC.	ELECTRICAL	MTL	METAL	WG	WIRE GLASS
ELEV.	ELEVATOR, OR ELEVATOR			WH	WATER HEATER
EP	ELECTRICAL PANEL			WP	WATERPROOF
EQ	EQUAL	N.	NEW	W/	WITH
EQUIP.	EQUIPMENT	N.I.C.	NOT IN CONTRACT	W/O	WITHOUT
EWC	ELECTRIC WATER COOLER	NOM.	NOMINAL	WWF	WELDED WIRE FABRIC
EXP	EXPOSED OR EXPANSION				
		O.A.	OVERALL		
		OC	ON CENTER		
		OD	OUTSIDE DIAMETER		
		O.F.	OVERFLOW DRAIN		
		OHD	OVERHEAD DOOR		
		OPG	OPENING		
		OPP.	OPPOSITE		

1" ORIGINAL SIZE

MATERIAL SYMBOLS

EARTH
SAND
GRANULAR
CONCRETE
CONCRETE MASONRY UNITS
BRICK
STEEL
CONTINUOUS WOOD MEMBER
BLOCKING
PLYWOOD
GYPSUM SHEATHING
FINISH WOOD
MOISTURE BARRIER
RIGID INSULATION
BATT INSULATION
SHEET METAL
GYPSUM BOARD
PLASTER
CERAMIC TILE

DRAWING SYMBOLS

A1 / A101 — BUILDING SECTION; DRAWING LOCATION SHEET NUMBER
A1 / A101 — WALL SECTION; DRAWING LOCATION SHEET NUMBER
A1 / A101 — DETAIL SECTION; DRAWING LOCATION SHEET NUMBER
DETAIL LOCATION
A / A101 — BUILDING ELEVATION; DRAWING LOCATION SHEET NUMBER
A / A101 — INTERIOR ELEVATION; DRAWING LOCATION SHEET NUMBER
A1 / A101 — WINDOW/LOUVER REFERENCE; DRAWING LOCATION SHEET NUMBER
DOOR MARK
101 — ROOM NUMBER/DOOR NUMBER
XXXX — ASSEMBLY TYPE; REFERENCE TO SCHEDULE
101 ENTRY — ROOM NUMBER/ROOM NAME
SPOT ELEVATION

DRAWING INDEX

THE PREPARATION OF THIS DOCUMENT WAS FUNDED IN ITS ENTIRETY WITH FEDERAL FUNDS FROM THE OREGON COMMUNITY DEVELOPMENT BLOCK GRANT PROGRAM. THIS DOCUMENT IS NOT SUBJECT TO STATE OR FEDERAL COPYRIGHT LAW. AS SUCH, ANY PART OF THE DOCUMENT MAY BE REPRINTED, COPIED OR DUPLICATED WITHOUT THE PERMISSION OF THE STATE OF OREGON OR THE GRANT RECIPIENT.

PROJECT DIRECTORY

OWNER:
CITY OF WARRENTON
P.O. BOX 250
WARRENTON, OREGON 97146-0250
(503) 861-2233
(503) 861-2351 FAX

ARCHITECT:
MCM ARCHITECTS
1022 SW SALMON, SUITE 350
PORTLAND, OREGON 97205
(503) 222-5757
(503) 241-1514 FAX

STRUCTURAL ENGINEER:
BERRY/NORDLING ENGINEERS
701 SE MILLER STREET
PORTLAND, OREGON 97202
(503) 231-0717
(503) 231-0718 FAX

MECHANICAL ENGINEERS:
CHRIS BILLINGS & ASSOCIATES
4445 SW BARBUR BLVD-2ND FLR
PORTLAND, OREGON 97201
(503) 228-0008
(503) 228-2280 FAX

ELECTRICAL ENGINEERS:
COLUMBIA CONSULTING ENGINEERS
620 SW 5TH -SUITE 1220
PORTLAND, OREGON 97204
(503) 243-2850
(503) 224-5046 FAX

PROJECT INFORMATION:

LEGAL: 8-10-21CA, BLOCK 16, TAX LOT 100 INCLUDING VACATED SW BIRCH AVENUE BETWEEN SW 3RD AND SW 4TH; AND 8-10-21AC, BLOCK 17, TAX LOT 7000 SMITH'S EDITION, WARRENTON, INCLUDING VACATED SW BIRCH AVENUE BETWEEN SW 3RD AND SW 4TH. CITY OF WARRENTON CLATSOP COUNTY, OREGON.

ZONE: CITY PARK

OCCUPANCY GROUP: E2 & E3

U.B.C. CONSTRUCTION TYPE: V-NON RATED

NO. OF STORIES: 1 STORIES

ALLOWED BUILDING AREA:	9,100 SF.
FOR SEPARATION X 2	9,100 SF.
ALLOWABLE AREA:	18,200 SF.
PROPOSED AREA:	6,540 GSF

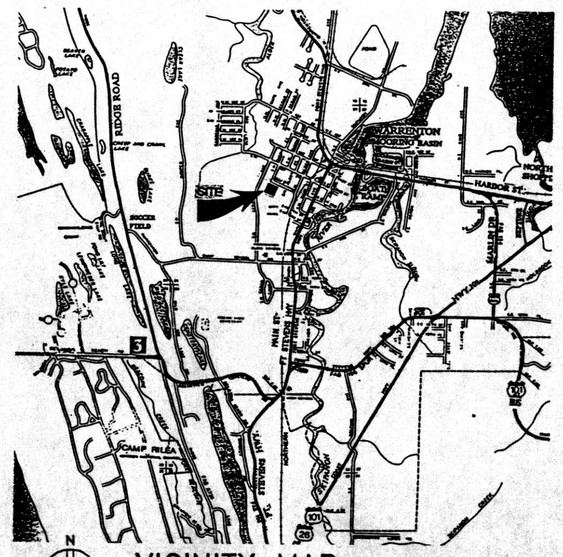

VICINITY MAP

MCM
ARCHITECTS
A PROFESSIONAL CORPORATION
1022 SOUTHWEST SALMON SUITE 350
PORTLAND, OREGON 97205-2447 USA
TELEPHONE 503 222 5757 FAX 503 241 1514

PROJECT:
HEADSTART
WARRENTON/ASTORIA

WARRENTON, OREGON

PROJECT NO.: 94084
FILE NO.: A1.dwg
DATE: JUNE 15, 1995

REVISIONS:	DATE:	DESCRIPTION:

SHEET TITLE:
GENERAL INFO AND SITE PLAN

SHEET NO.: A1

ABBREVIATIONS:

AL: ALUMINUM & GLASS
CL: CLEAR GLASS
HC: HOLLOW CORE WOOD
HM: HOLLOW METAL
P: PAINT
PF: PREFINISHED
SC: SOLID CORE WOOD
ST: STAIN
T: TRANSPARENT FINISH
TG: TEMPERED GLASS
WG: WIRE GLASS
WD: WOOD

MARK	TYPE DOOR	TYPE FRAME	SIZE WIDTH	SIZE HEIGHT	DOOR MATL	DOOR FINISH	FRAME MATL	FRAME FINISH	HDW GRP	RATING	INFILL	DETAIL	NOTE
102-1	C	WD	3'-0"	6'-8"	SC	P	WD	P	1		TG	A1/A7	
103-1	C		3'-0"						2		TG	A1/A7	
103-2	C		3'-0"						3		TG	A1/A7	
104-1	D		3'-0"						5			A1/A7	
105-1	B		3'-0"						4		TG	B2/A3	
106-1	D		3'-0"						1			A1/A7	
106-2	D		3'-0"						3			B2/A3	
107-1	B	V	3'-0"	V	V	V	V	V	1		TG	A1/A7	
107-2	A	WD	3'-0"	6'-8"	SC	P	WD	P	6		TG	B2/A3	
107-3													FOLDING DOOR
108-1	A	WD	3'-0"	6'-8"	SC	P	WD	P	4		TG	B2/A3	
108-2	C		3'-0"						1		TG	A1/A7	
108-3	B		3'-0"						1		TG	A1/A7	
108-4	B		3'-0"						1		TG	A1/A7	
109-1	B	V	3'-0"	V	V	V	V	V	6		TG	A1/A7	
109-2	A	WD	3'-0"	6'-8"	SC	P	WD	P				B2/A3	
109-3													FOLDING DOOR
10-1	B	WD	3'-0"	6'-8"	SC	P	WD	P	4		TG	B2/A3	
111-1	D		3'-0"						1			A1/A7	
111-2	D		3'-0"						3			B2/A3	
112-1	C		3'-0"						1		TG	A1/A7	
12-2	D		3'-0"						3			B2/A3	
113-1	D		3'-0"						5			A1/A7	
114-1	C		3'-0"						1		TG	A1/A7	
114-2	C		3'-0"								TG	A1/A7	
115-1	C		3'-0"						1		TG	A1/A7	
116-1	C		3'-0"						1		TG	A1/A7	
117-1	C		3'-0"						1		TG	A1/A7	
118-1	D		3'-0"						5			A1/A7	
119-1	C		3'-0"						1		TG	A1/A7	
120-1	C		3'-0"						1		TG	A1/A7	
121-1	D	V	3'-0"	V	V	V	V	V	7			A1/A7	
122-1	D	WD	3'-0"	6'-8"	SC	P	WD	P	7			A1/A7	

A1 DOOR WINDOW SCHEDULE
NA

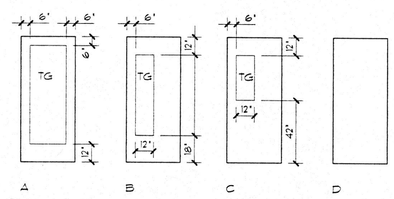

C1 DOOR TYPES
1/4" = 1'-0"

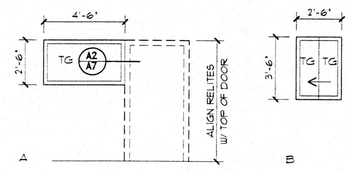

D1 RELITE TYPES
1/4" = 1'-0"

ABBREVIATIONS:

AT: ACOUSTICAL TILE PANEL
CONC: CONCRETE
CPT: CARPET
CT: CERAMIC TILE
GYP: GYPSUM BOARD
P: PAINT
MAT: WALK OFF MAT
RB: RUBBER BASE
SV: SHEET VINYL
VCT: VINYL COMPOSITION TILE
VW: VINYL WALL COVERING
WD: WOOD

RM. NO.	ROOM NAME	WALLS N.	WALLS E.	WALLS S.	WALLS W.	CEILING	FLOOR	BASE	NOTE
101	CORRIDOR	GYP	GYP	GYP	GYP	GYP	VCT	RB	
102	KITCHEN					V	SV		
103	PANTRY						SV		
104	UTILITY					AT	VCT		
105	CLASSROOM 1					GYP	CPT/VCT		PLAM WAINSCOAT PER NT. ELEVS
106	STORAGE					GYP	CONC		
107	LUNCHROOM 1					AT	CPT		
108	ENTRY/LOBBY					GYP	MAT/CPT		
109	LUNCHROOM 2					AT	VCT		
110	CLASSROOM 2					V	CPT/VCT		PLAM WAINSCOAT PER NT. ELEVS
111	STORAGE						CONC		
112	CHILD CARE					AT	CPT/VCT		PLAM WAINSCOAT PER NT. ELEVS
113	HVAC CLOSET					GYP	VCT		
114	ADULT CLASSROOM					AT	CPT		
115	THERAPY					GYP	CPT		
116	OFFICE						CPT		
117	TEACHER 1						CPT		
118	HVAC CLOSET						VCT		
119	OFFICE						CPT		
120	TEACHER 2						CPT		
121	WC	V	V	V	V	V	VCT	V	PLAM WAINSCOAT N & W WALLS
122	HC WC						VCT		PLAM WAINSCOAT N & E WALLS

E1 FINISH SCHEDULE
NA

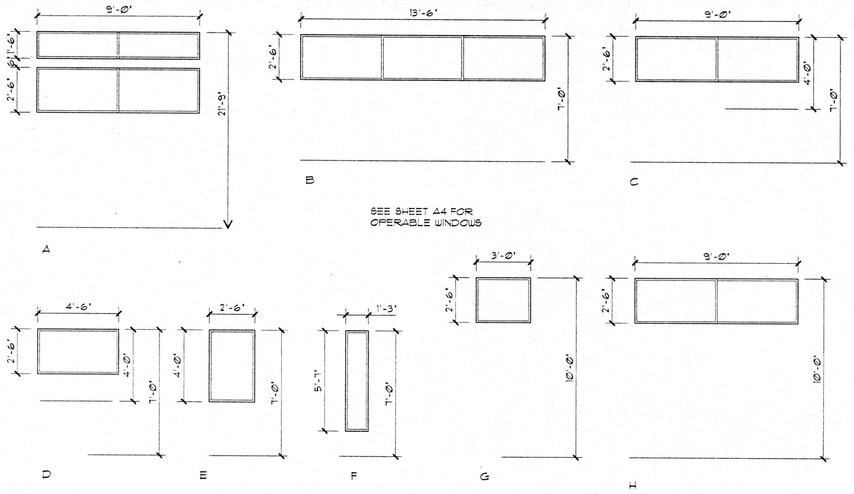

SEE SHEET A4 FOR OPERABLE WINDOWS

A2 WINDOW TYPES
1/4" = 1'-0"

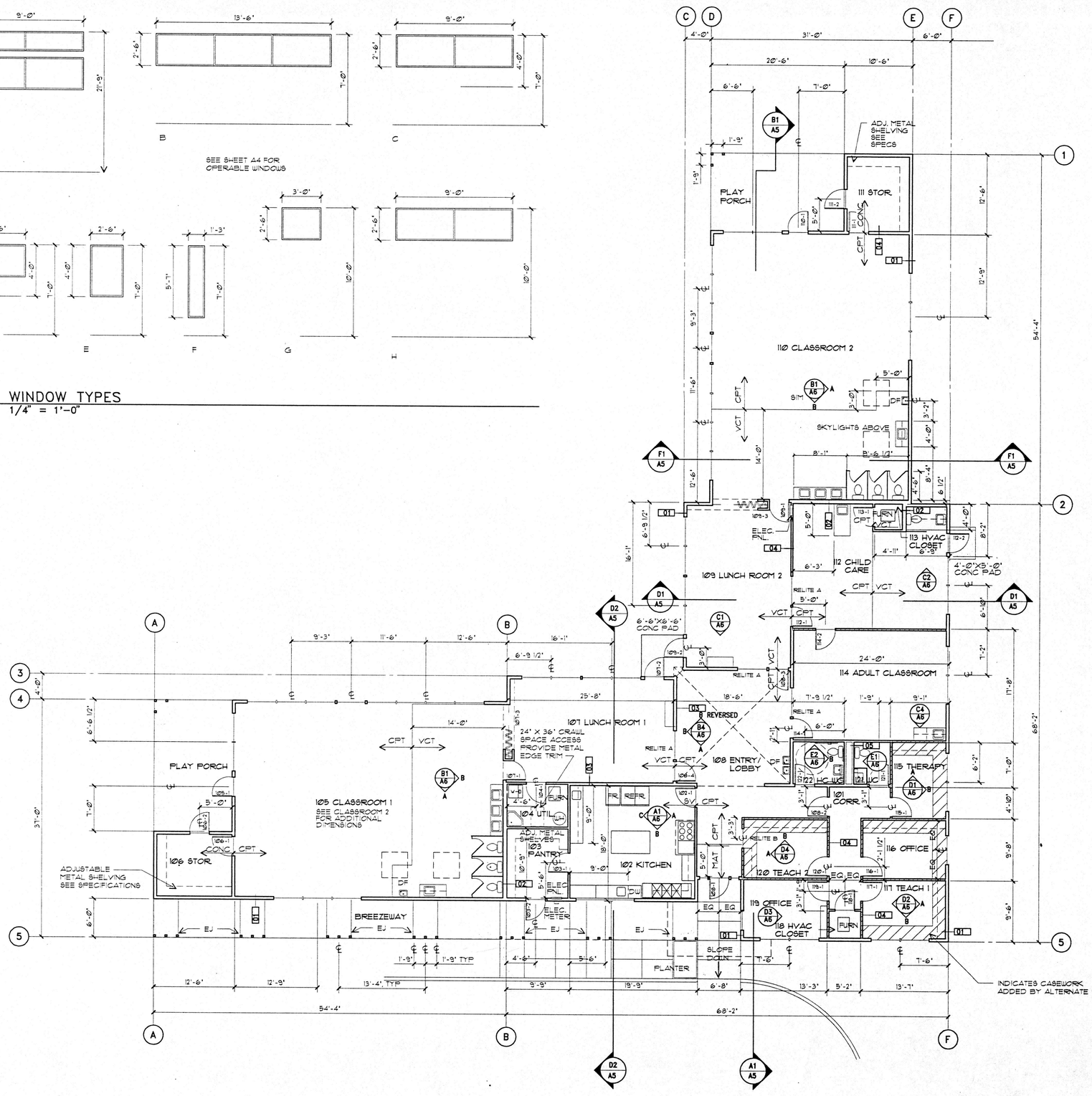

E3 FLOOR PLAN
1/8" = 1'-0"

WALL TYPES

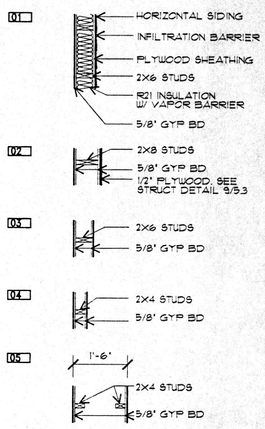

NOTES THIS SHEET

1. ALL DIMENSIONS TO FACE OF STUD OR CENTERLINE OF OPENING U.O.N.
2. SEE STRUCTURAL DRAWINGS FOR ADDITIONAL NOTES & DIMENSIONS
3. ALL INTERIOR WALLS ARE TYPE 04 U.O.N.
4. ////// INDICATES 3 1/2" SOUND BATTS CAULK GYP BD AGAINST PLATES & WALL FRAMING INTERSECTIONS

MCM ARCHITECTS
A PROFESSIONAL CORPORATION
1022 SOUTHWEST SALMON SUITE 350
PORTLAND, OREGON 97205-2447 USA
TELEPHONE 503 222 5757 FAX 503 241 1514

PROJECT:

HEAD START CENTER

WARRENTON/ASTORIA

PROJECT NO.: 94084
FILE NO.: A2.dwg
DATE: JUNE 15, 1995

REVISIONS:	DATE:	DESCRIPTION:

SHEET TITLE:

FLOOR PLAN & SCHEDULES

SHEET NO.: A2

REGISTERED ARCHITECT 1291 MICHAEL J. MYLES Portland, Oregon STATE OF OREGON

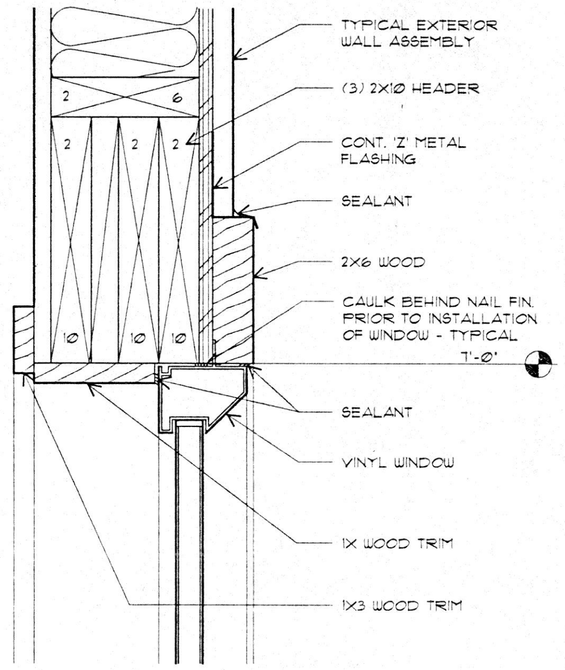

B1 WINDOW HEAD
3"=1'-0" R-EXWL 94084 A3

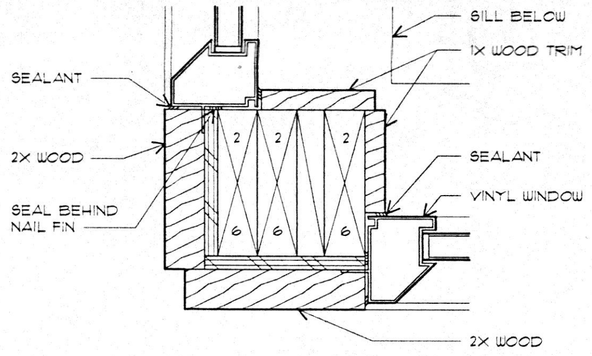

A2 WINDOW JAMB AT CORNER
3"=1'-0" R-EXWL 94084 A3

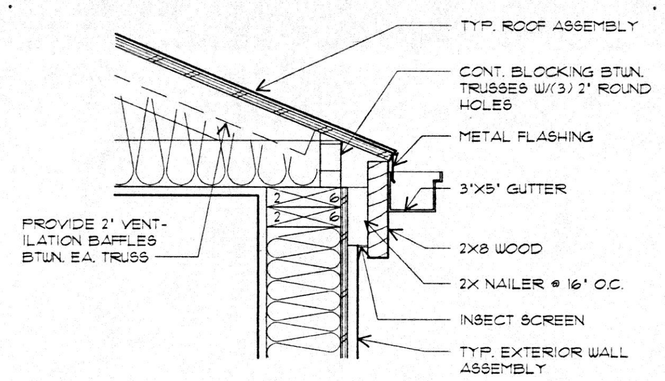

A3 EAVE DETAIL
1-1/2"=1'-0" R-ROOF 94084 A3

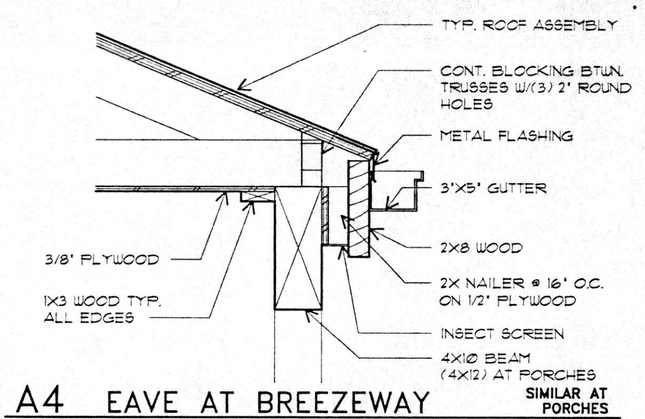

SIMILAR AT PORCHES

A4 EAVE AT BREEZEWAY
1-1/2"=1'-0" R-ROOF 94084 A3

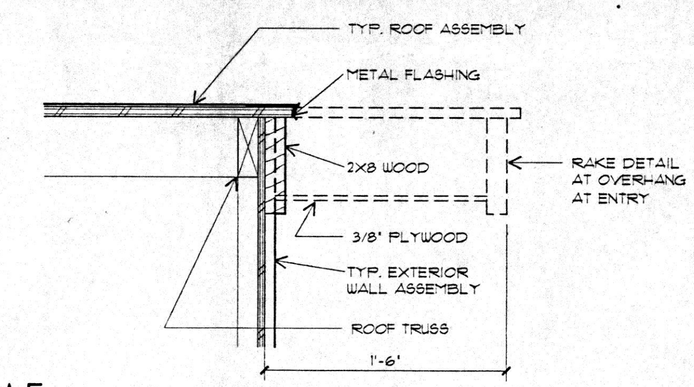

A5 RAKE DETAIL
1-1/2"=1'-0" R-ROOF 94084 A3

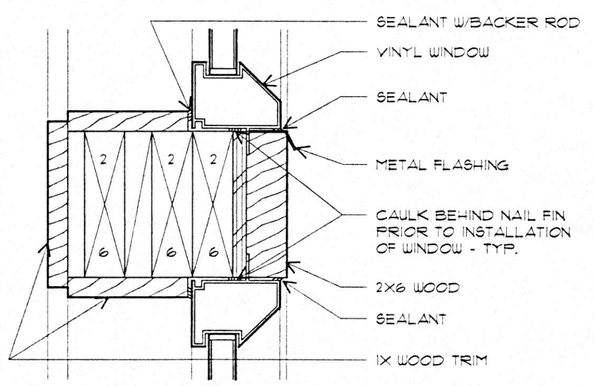

C1 HORIZONTAL WINDOW MULLION
3"=1'-0" R-EXWL 94084 A3

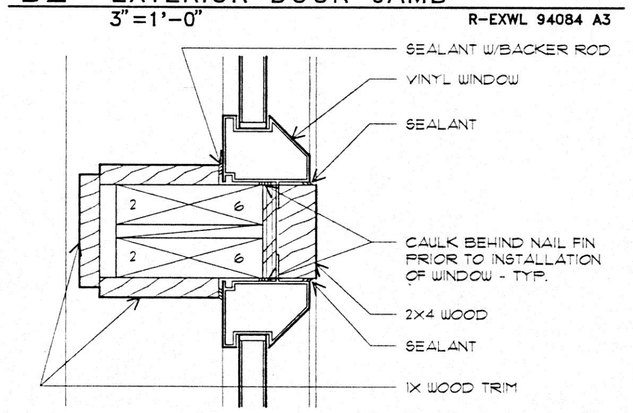

C2 VERTICAL WINDOW MULLION
3"=1'-0" R-EXWL 94084 A3

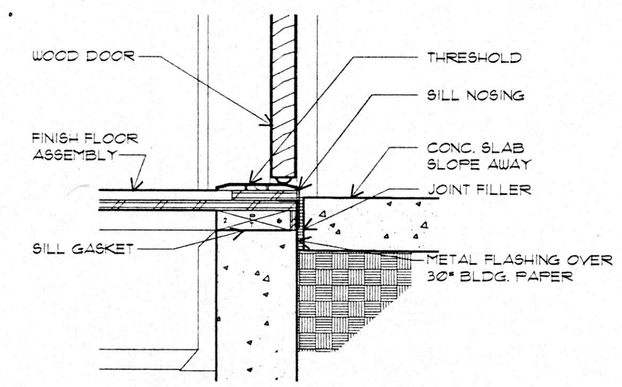

C3 DOOR THRESHOLD
1-1/2"=1'-0" R-EXWL 94084 A3

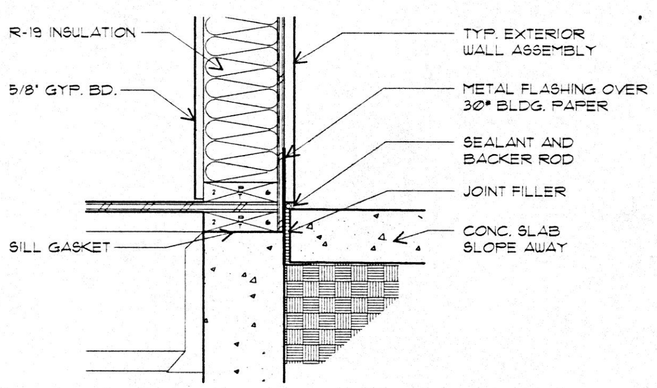

C4 WALL SILL AT PORCHES
1-1/2"=1'-0" R-EXWL 94084 A3

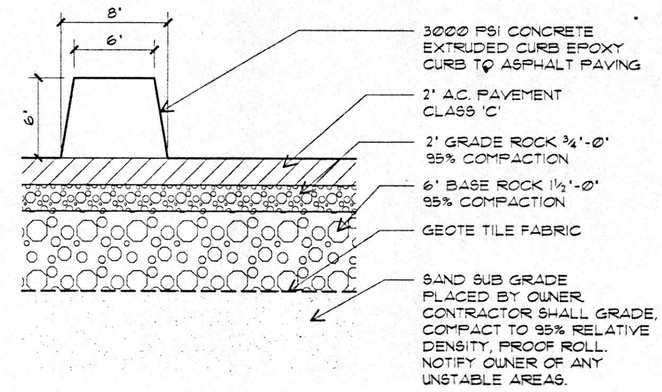

B5 TYPICAL CURB & PAVING DETAIL
1-1/2"=1'-0" R-SITE 94084 A3

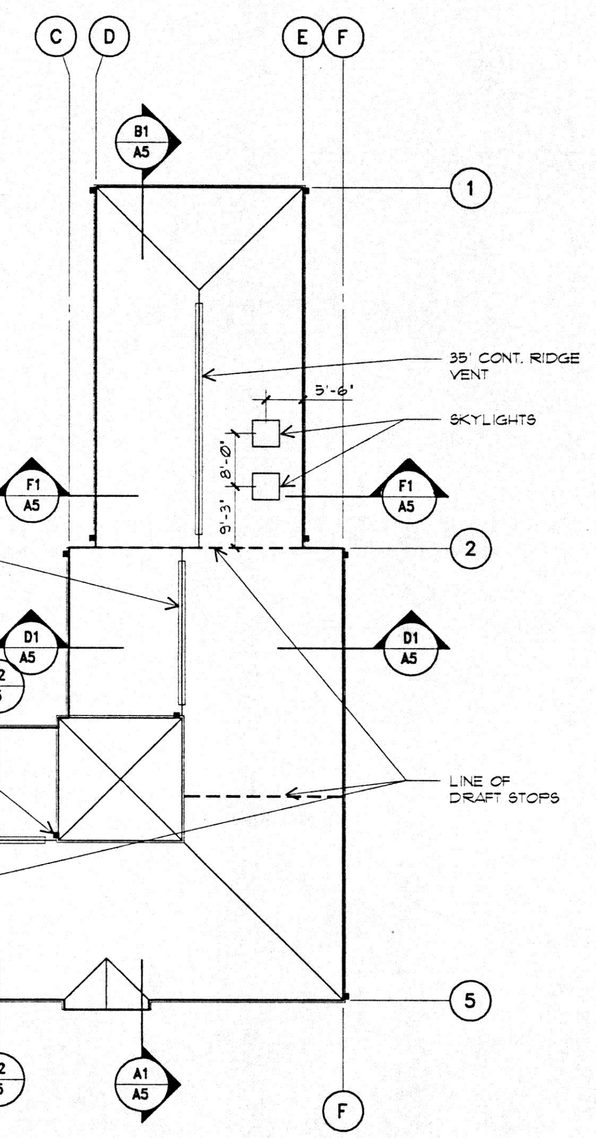

E4 ROOF PLAN
1/16"=1'-0"

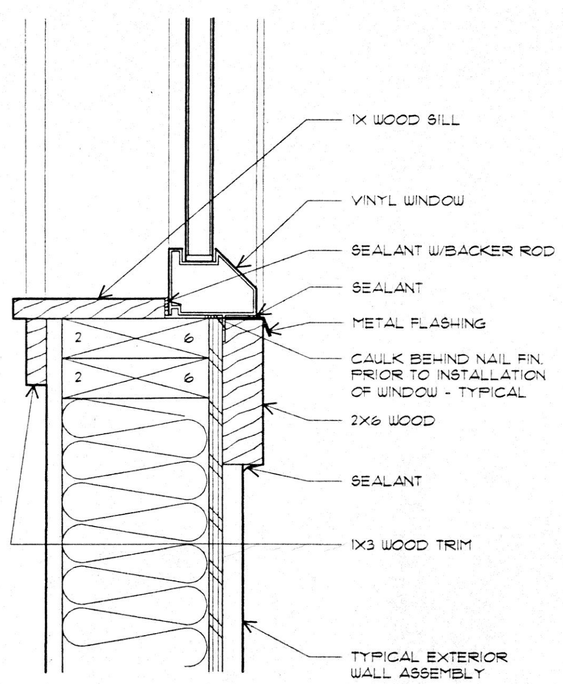

E1 WINDOW SILL
3"=1'-0" R-EXWL 94084 A3

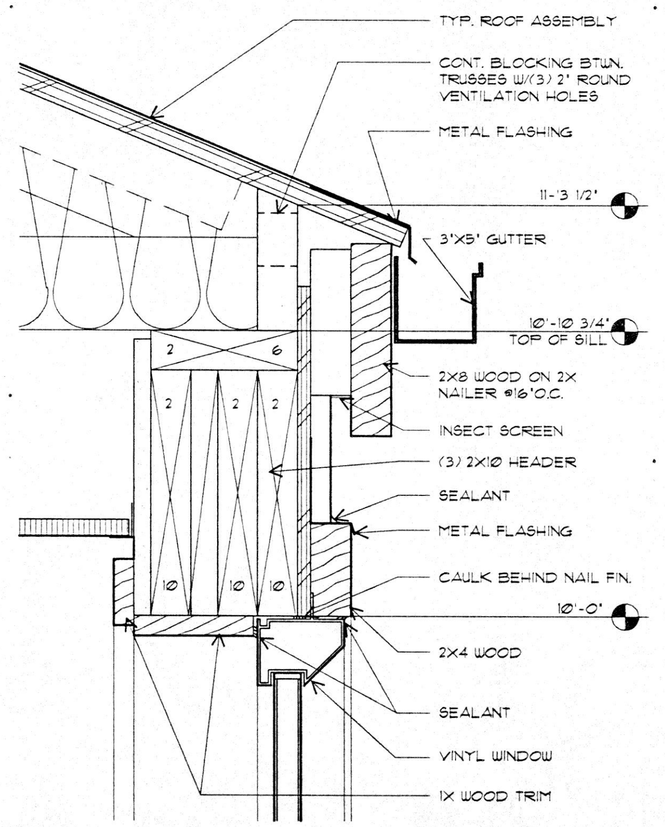

E2 WINDOW HEAD AND EAVE DETAIL
3"=1'-0" R-ROOF 94084 A3

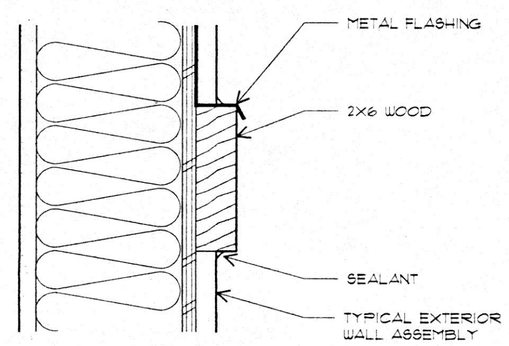

D3 6' TRIM BOARD DETAIL
3"=1'-0" R-EXWL 94084 A3

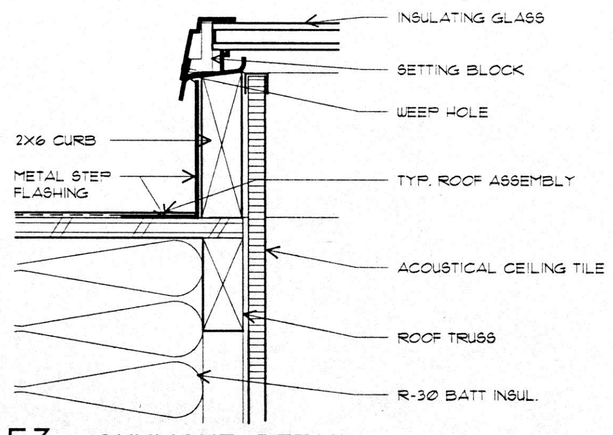

E3 SKYLIGHT DETAIL
3"=1'-0" R-ROOF 94084 A3

REGISTERED ARCHITECT
1261
MICHAEL J. MYLES
Portland, Oregon
STATE OF OREGON

MCM ARCHITECTS
A PROFESSIONAL CORPORATION
1022 SOUTHWEST SALMON SUITE 350
PORTLAND, OREGON 97205-2447 USA
TELEPHONE 503 222 5757 FAX 503 241 1514

PROJECT:
HEAD START CENTER

WARRENTON/ASTORIA

PROJECT NO.: 94084
FILE NO.: A3.dwg
DATE: JUNE 15, 1995

REVISIONS:	DATE:	DESCRIPTION:
.	.	.

SHEET TITLE:
ROOF PLAN & EXT. DETAILS

SHEET NO.: A3

1" ORIGINAL SIZE

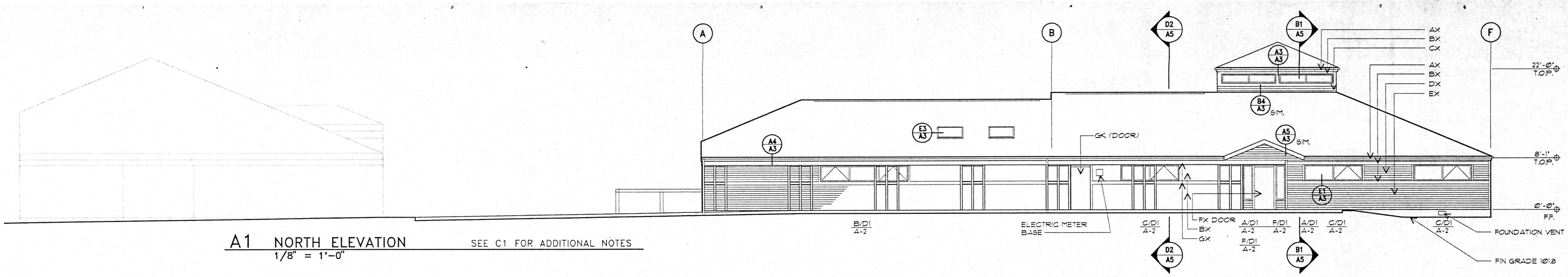

A1 NORTH ELEVATION

1/8" = 1'-0"

SEE C1 FOR ADDITIONAL NOTES

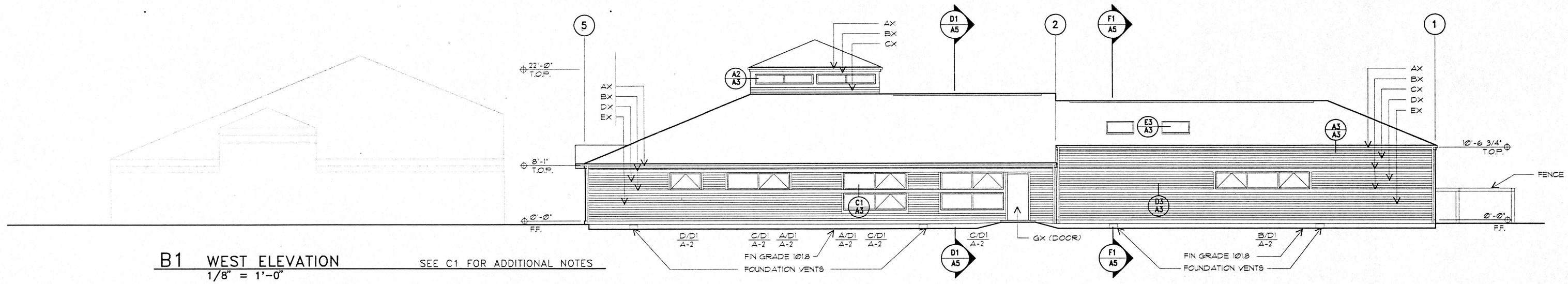

B1 WEST ELEVATION

1/8" = 1'-0"

SEE C1 FOR ADDITIONAL NOTES

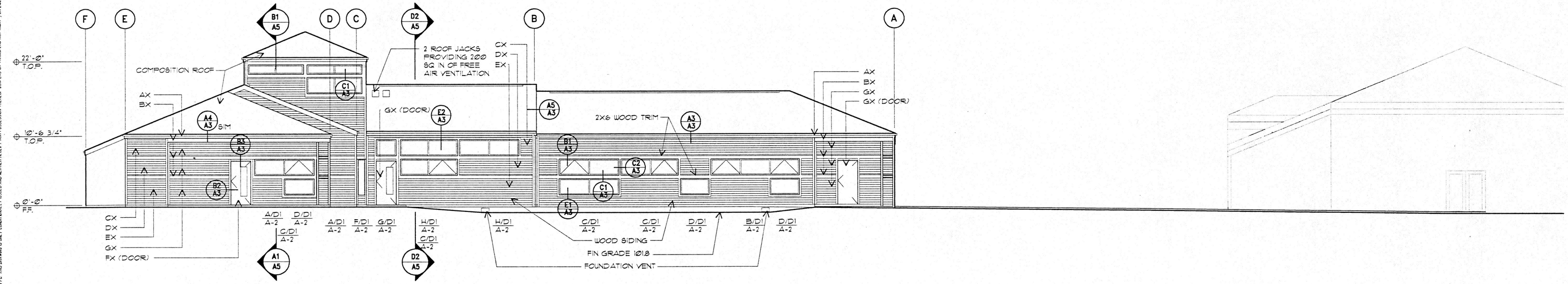

C1 SOUTH ELEVATION

1/8" = 1'-0"

TYPICAL ELEVATION

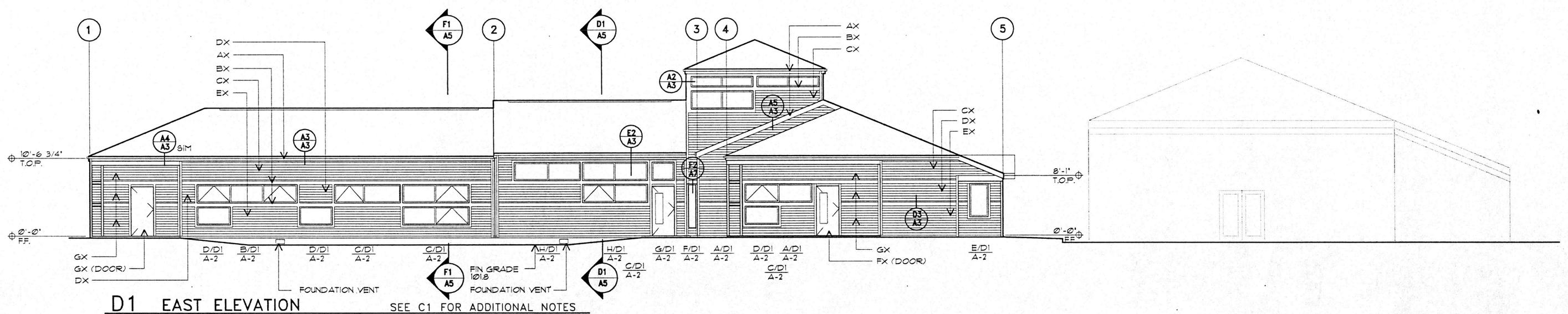

D1 EAST ELEVATION

1/8" = 1'-0"

SEE C1 FOR ADDITIONAL NOTES

EXTERIOR COLORS
(SHERWIN WILLIAMS NUMBERS)

AX	GOLDEN BLUFF	2331
BX	IMPRESSIVE IVORY	2333
CX	BAYSIDE	2387
DX	SWAN LAKE	2388
EX	LA JOLLA BLUE	1484
FX	RED BARN	2307
GX	RIVIERA WATER	2386

NOTE: ALL TRIM & DOWNSPOUTS TO BE (EX)

MCM ARCHITECTS

A PROFESSIONAL CORPORATION
1022 SOUTHWEST SALMON SUITE 350
PORTLAND, OREGON 97205-2447 USA
TELEPHONE 503 222 5757 FAX 503 241 1514

PROJECT:

HEAD START CENTER

WARRENTON/ASTORIA

PROJECT NO.: 94084
FILE NO.: A4.dwg
DATE: JUNE 15, 1995

REVISIONS:	DATE:	DESCRIPTION:

SHEET TITLE:

EXTERIOR ELEVATIONS

SHEET NO.: A4

REGISTERED ARCHITECT
1281
MICHAEL J. MYLES
Portland, Oregon
STATE OF OREGON

1" ORIGINAL SIZE

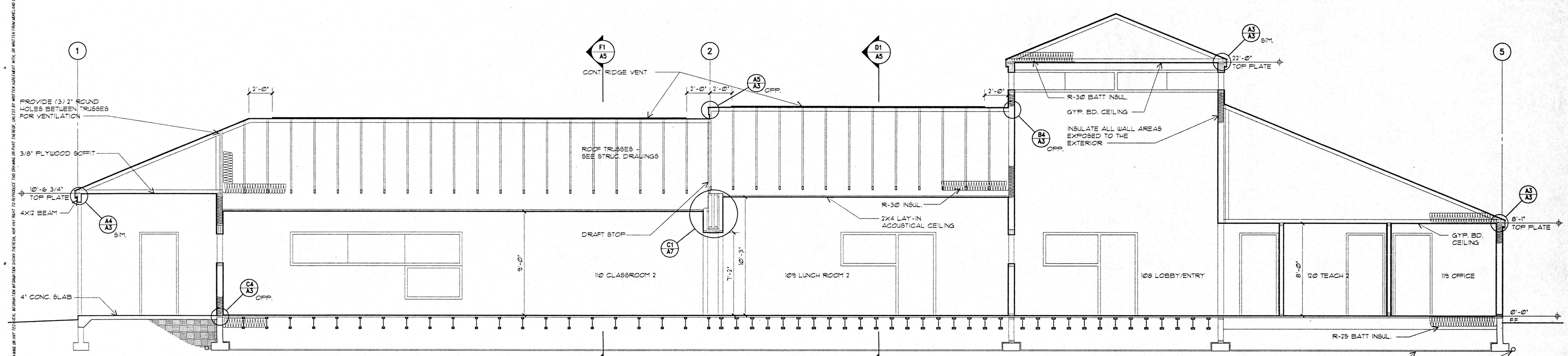

B1 SECTION (ROOF CUT AT RIDGE)

1/4 " = 1'-0"

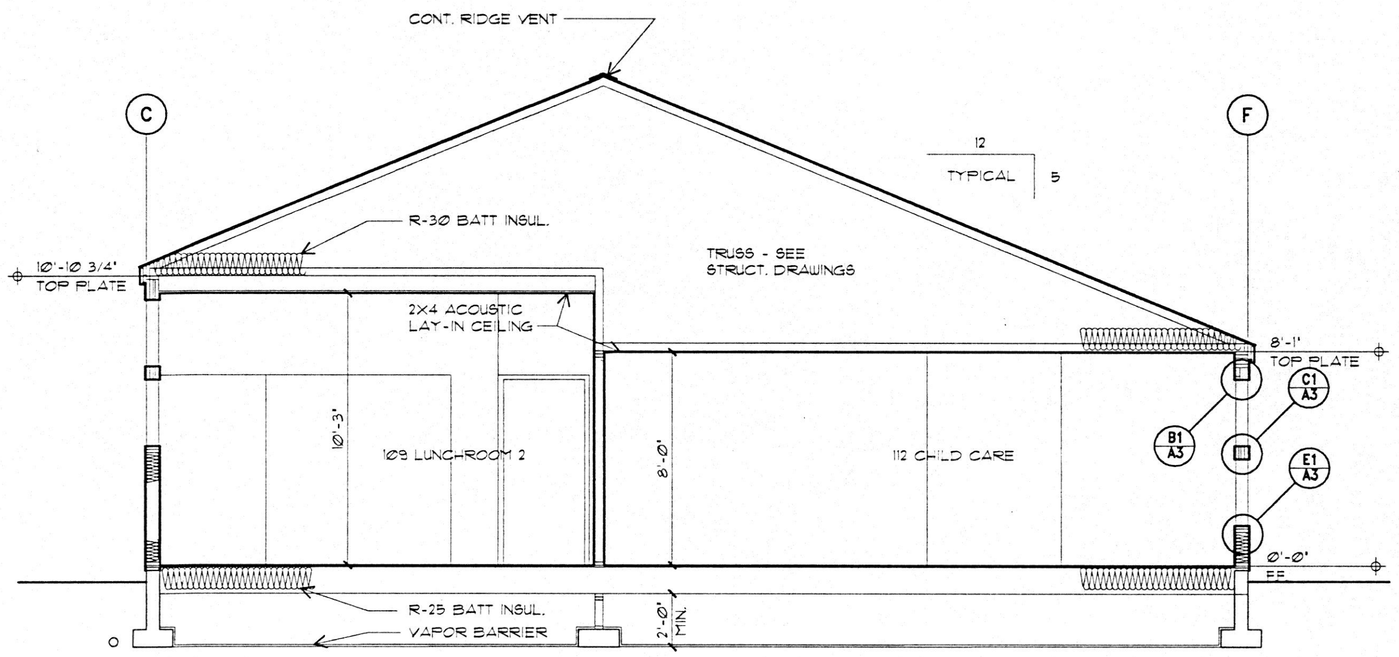

D1 SECTION

1/4 " = 1'-0"

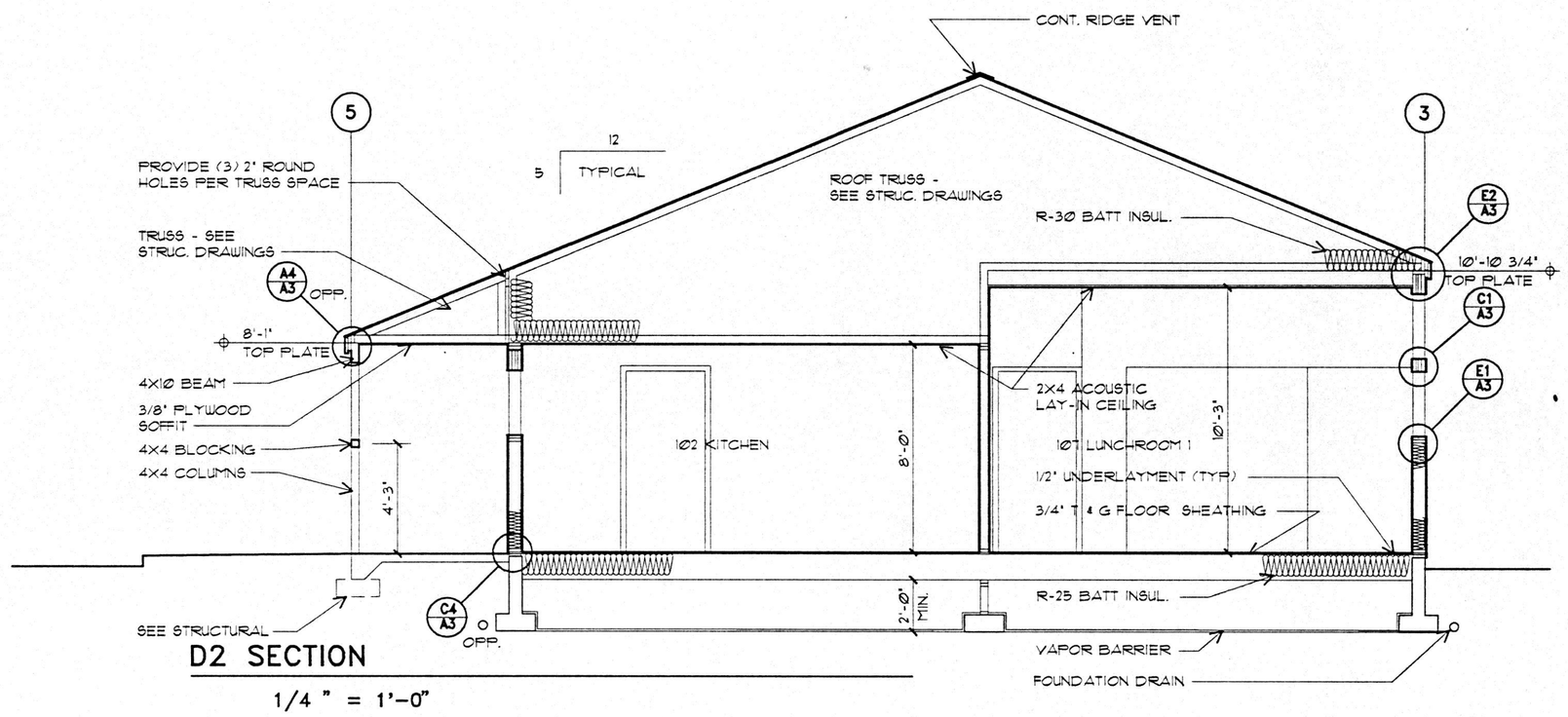

D2 SECTION

1/4 " = 1'-0"

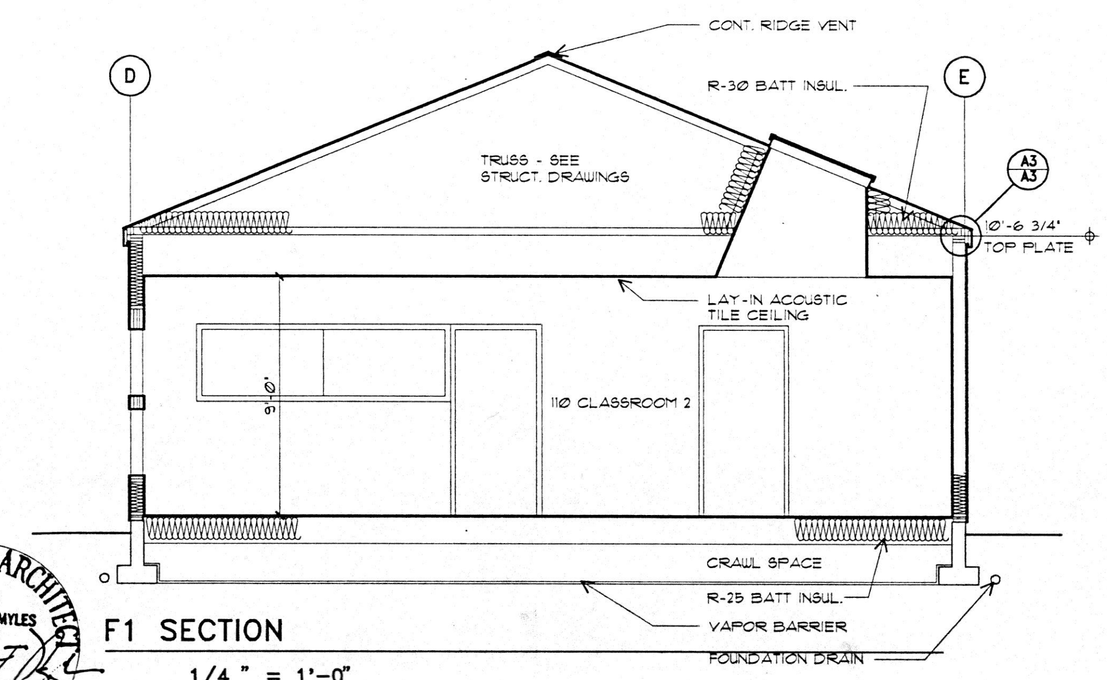

F1 SECTION

1/4 " = 1'-0"

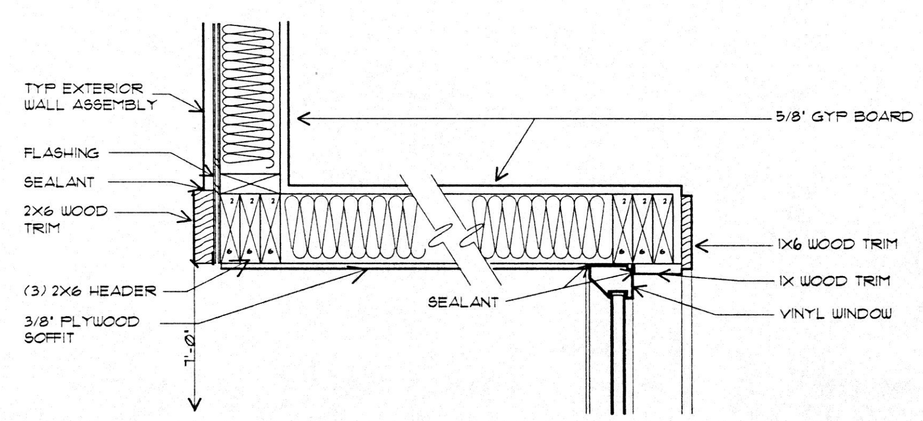

F2 HEADER @ LOBBY WINDOW

1 1/2 " = 1'-0"

R-EXWL 94084 A5

REGISTERED ARCHITECT
1281
MICHAEL J. MYLES
Portland, Oregon
STATE OF OREGON

MCM ARCHITECTS
A PROFESSIONAL CORPORATION
1022 SOUTHWEST SALMON SUITE 350
PORTLAND, OREGON 97205-2447 USA
TELEPHONE 503 222 5757 FAX 503 241 1514

PROJECT :
HEAD START CENTER

WARRENTON/ASTORIA

PROJECT NO. : 94084
FILE NO. : A5.dwg
DATE : JUNE 15, 1995

REVISIONS :	DATE :	DESCRIPTION :
.	.	.

SHEET TITLE :
BUILDING & WALL SECTIONS

SHEET NO. : A5

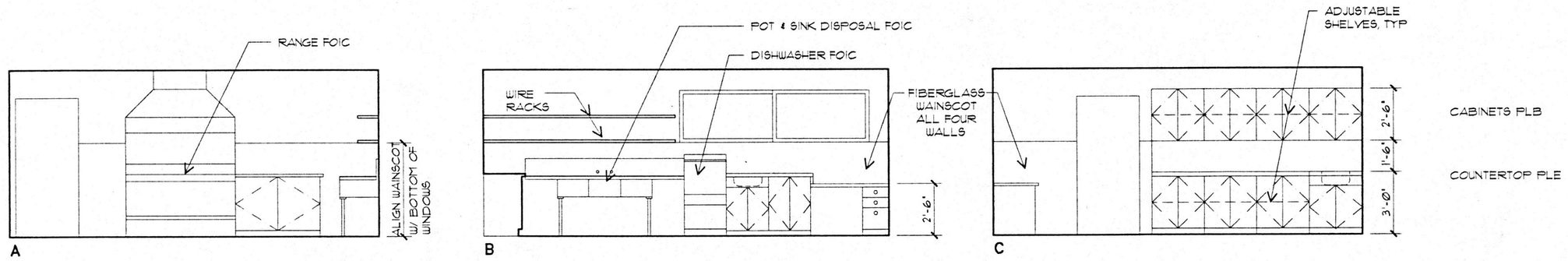

A1 102 KITCHEN
1/4" = 1'-0"

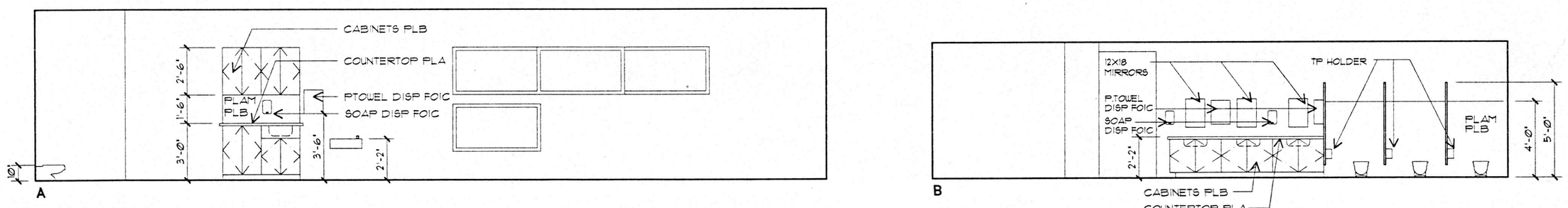

B1 105 CLASSROOM
1/4" = 1'-0"

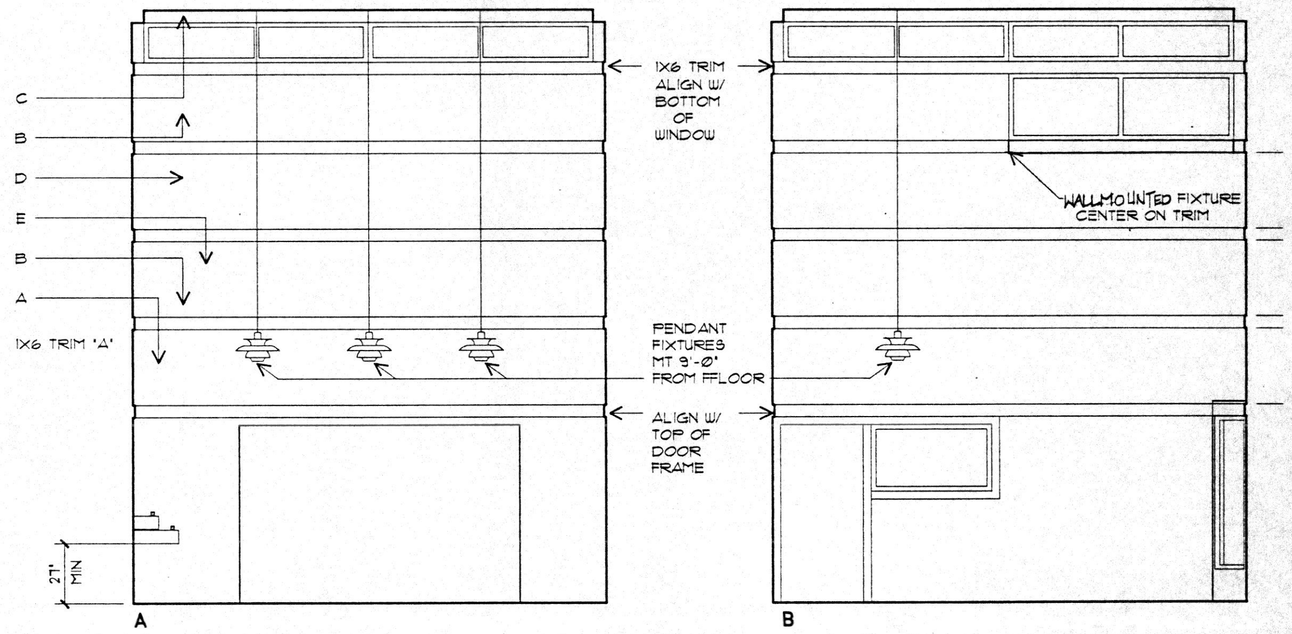

B4 108 ENTRY/LOBBY
1/4" = 1'-0"

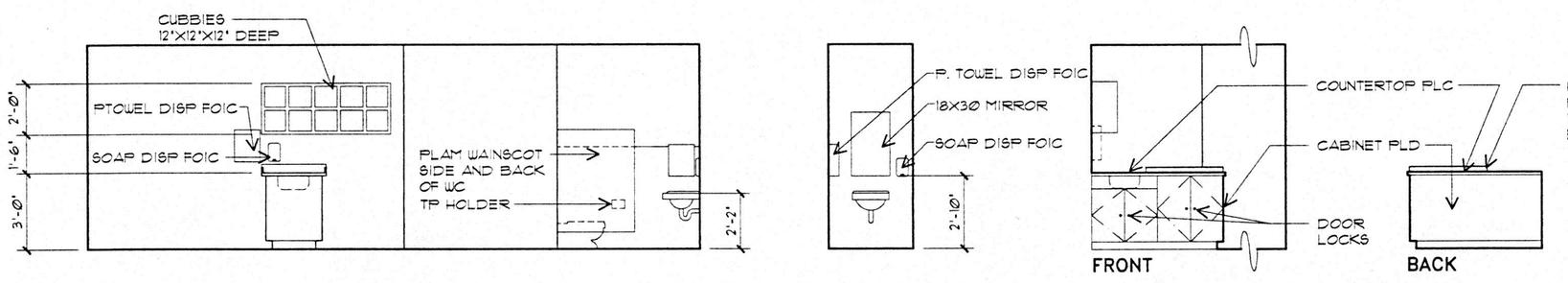

C1 112 CHILD CARE
1/4" = 1'-0"

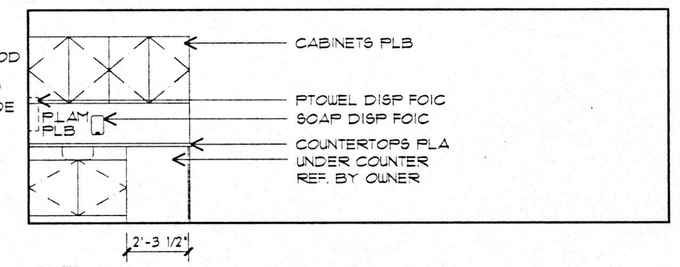

C3 114 ADULT CLASSROOM
1/4" = 1'-0"

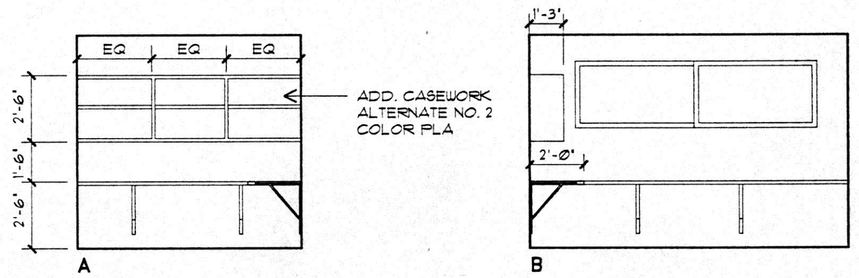

C4 115 THERAPY
1/4" = 1'-0"

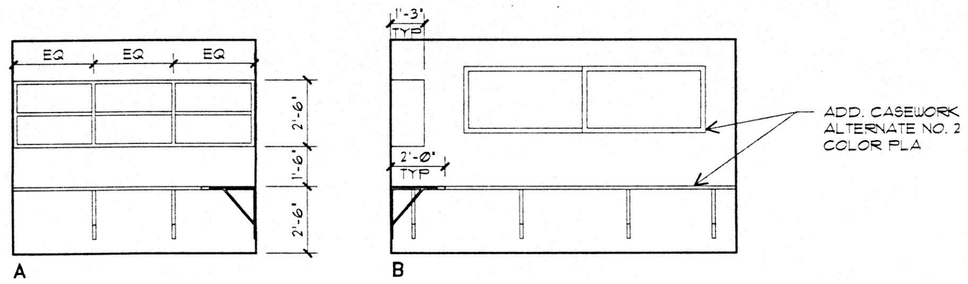

D1 117 TEACHER
1/4" = 1'-0"

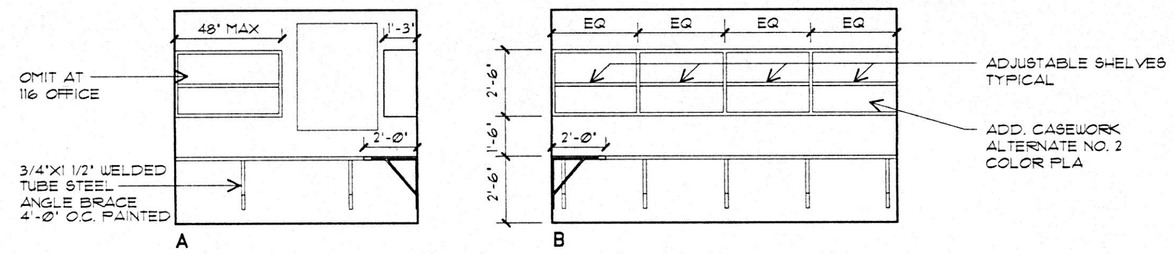

D2 120 TEACHER – 116 OFFICE (SIMILAR)
1/4" = 1'-0"

INTERIOR COLORS

ALL PAINT COLOR SELECTIONS BASED ON SHERWIN-WILLIAMS COLORS. PLASTIC LAMINATE COLORS ARE BASED ON PIONITE BRAND COLORS

DESCRIPTION	NUMBER	DWG CODE
COLLECTORS WHITE	1800T	A'
APPEALING APRICOT	1938	B''
RED BARN	2300T	C
INDIAN SUMMER	1621	D
FRENCH MARIGOLD	1624	E
SPRUCE FROST (CRYSTAL FINISH)		PLA
PALE SPRUCE (SUEDE FINISH)		PLB
RAW FIBER (CRYSTAL FINISH)		PLC
PEACH GLO (SUEDE FINISH)		PLD
VERDE JAGUAR (CRYSTAL)		PLE

NOTE: ALL INTERIOR WALLS & WOOD TRIM ARE 'A' UNLESS OTHERWISE NOTED. ALL INTERIOR DOORS ARE 'B' UNLESS OTHERWISE NOTED.

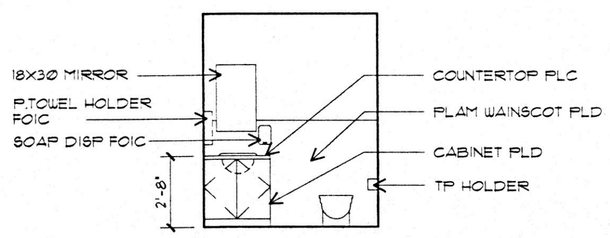

E1 121 WC
1/4" = 1'-0"

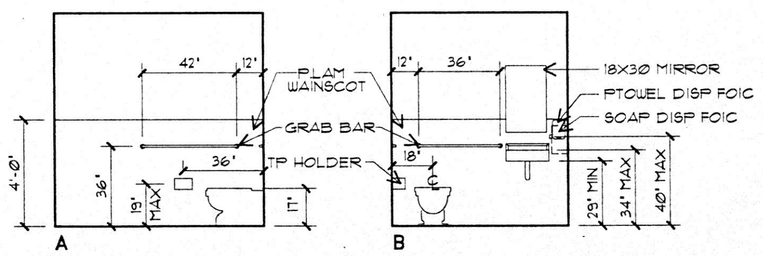

E2 122 HC WC
1/4" = 1'-0"

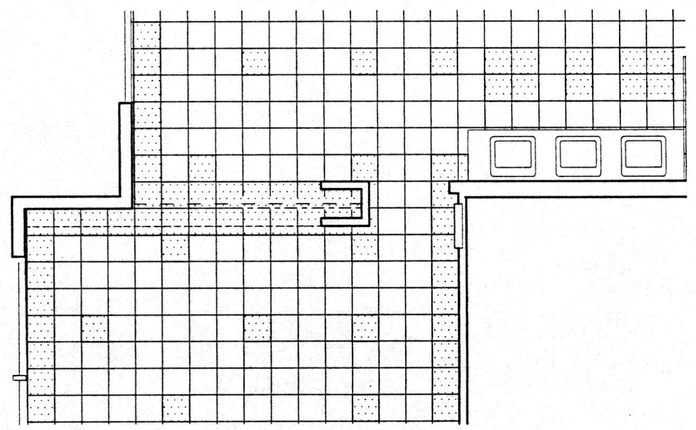

LEGEND

- TARKETT 'SIGNALS' COLOR 3513 'PURIFYING WHITE'
- TARKETT 'SIGNALS' COLOR 5222 'AQUA MEDIUM'

INSTALLER TO SUBMIT LAYOUT DRAWING FOR REVIEW AND APPROVAL PRIOR TO INSTALLATION

E3 109 LUNCHROOM/110 CLASSROOM FLOOR PATTERN DETAIL
1/4" = 1'-0"

REGISTERED ARCHITECT
1261
MICHAEL J. MYLES
Portland, Oregon
STATE OF OREGON

MCM ARCHITECTS
A PROFESSIONAL CORPORATION
1022 SOUTHWEST SALMON SUITE 350
PORTLAND, OREGON 97205-2447 USA
TELEPHONE 503 222 5757 FAX 503 241 1514

PROJECT:
HEAD START CENTER

WARRENTON/ASTORIA

PROJECT NO.: 94084
FILE NO.: A6.dwg
DATE: JUNE 15, 1995

REVISIONS:	DATE:	DESCRIPTION:
.	.	.

SHEET TITLE:
INT ELEVATIONS & DETAILS

SHEET NO.: A6

1" ORIGINAL SIZE

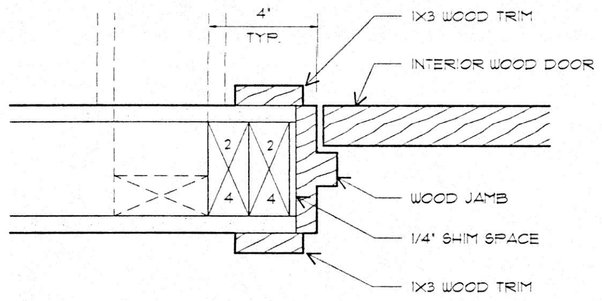

A1 INTERIOR DOOR JAMB – TYP.
3" = 1'-0" R-INWL 94084 A7

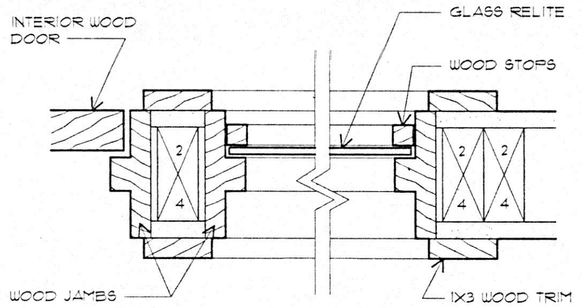

A2 INTERIOR RELITE JAMBS – TYP.
3" = 1'-0" R-INWL 94084 A7

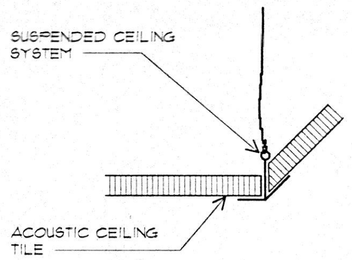

A3 SUSP. CEILING DETAIL
3" = 1'-0" R-CEIL 94084 A7

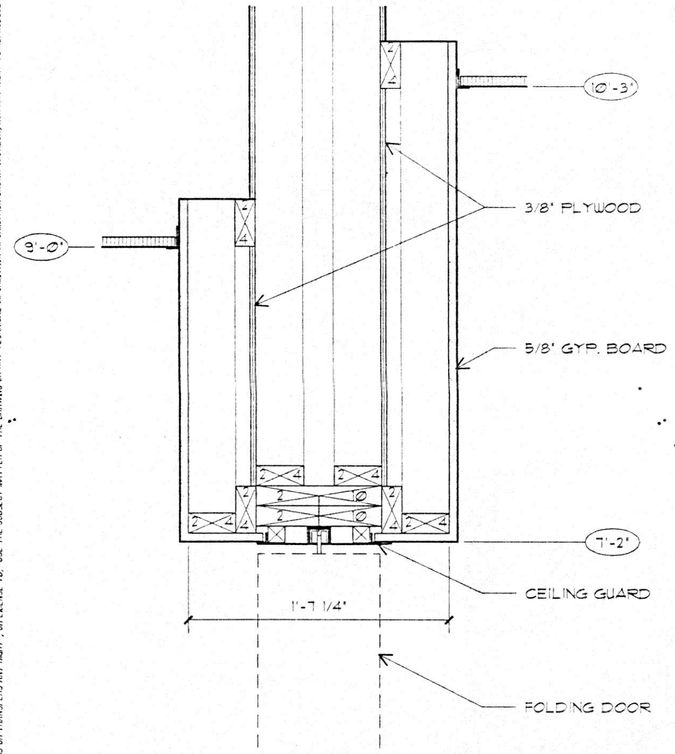

C1 FOLDING DOOR HEAD DETAIL
1-1/2" = 1'-0" R-CEIL 94084 A7

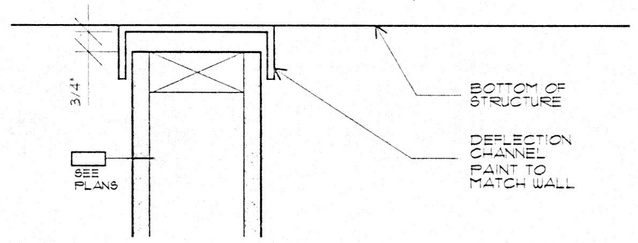

B2 DEFLECTION HEAD
3" = 1'-0" R-INWL 94084 A7

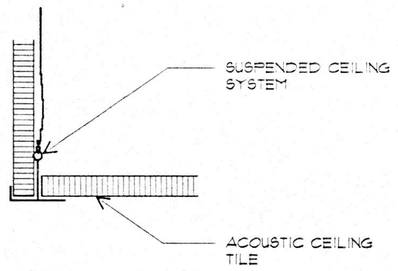

B3 SUSP. CEILING DETAIL
3" = 1'-0" R-CEIL 94084 A7

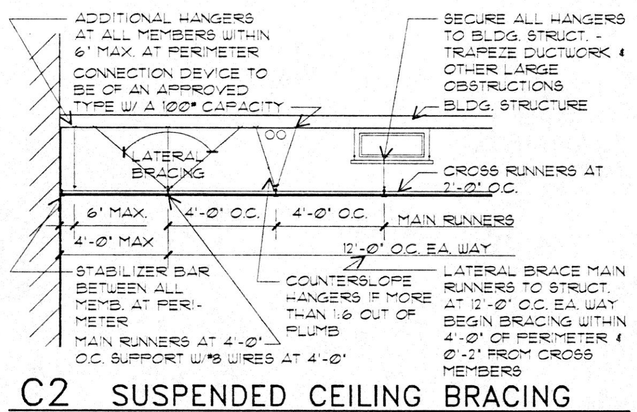

C2 SUSPENDED CEILING BRACING
1/4" = 1'-0" R-CEIL 94084 A7

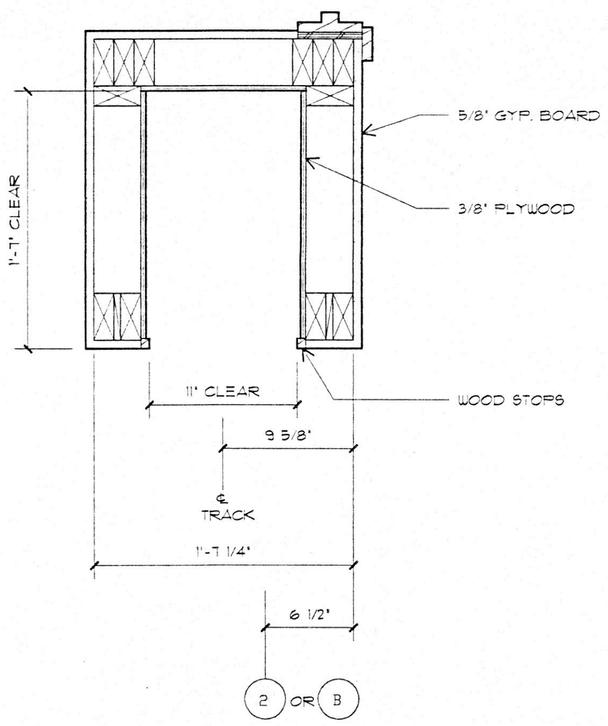

E1 FOLDING DOOR POCKET
1-1/2" = 1'-0" R-INWL 94084 A7

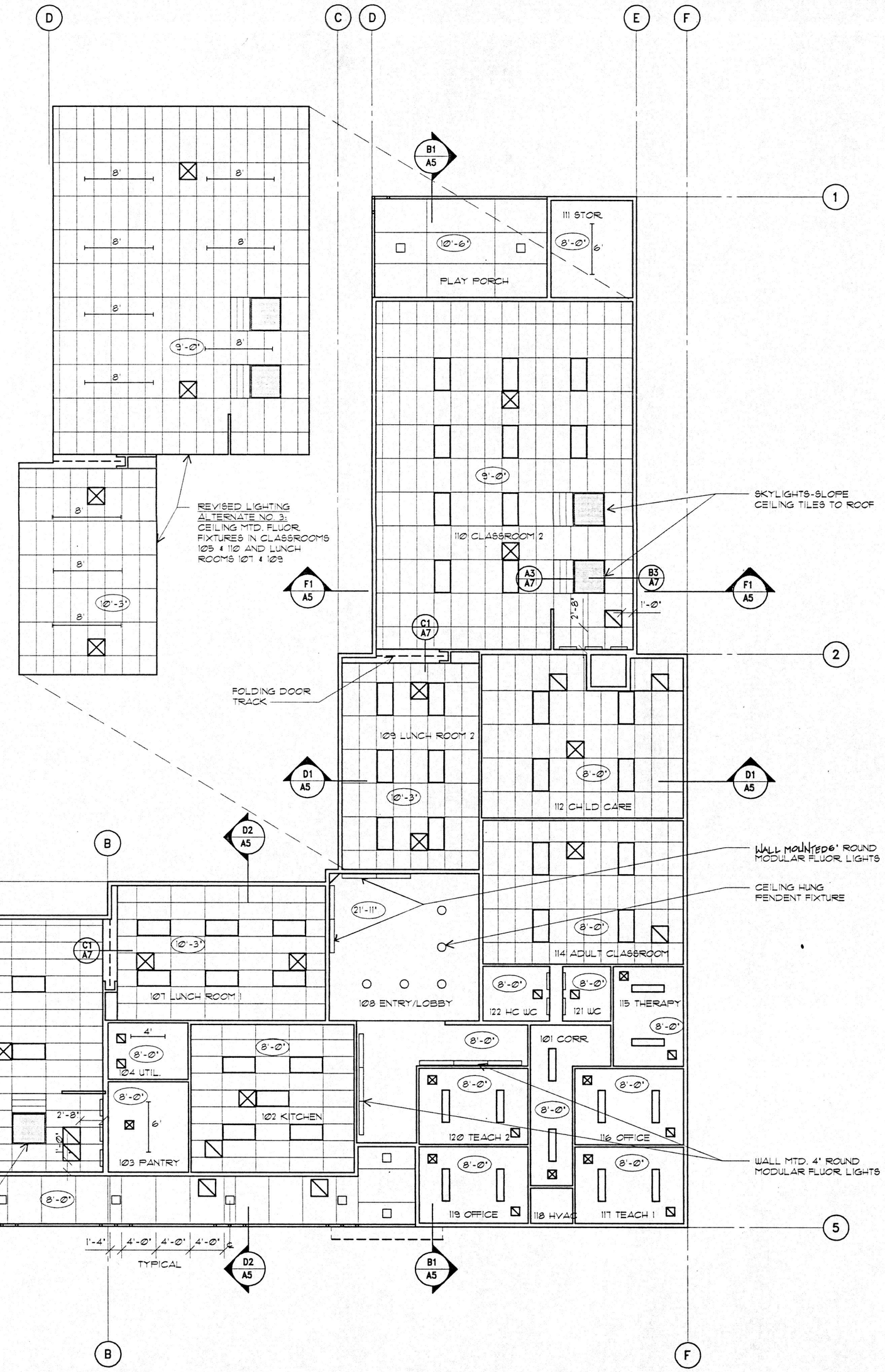

E3 REFLECTED CEILING PLAN
1/8" = 1'-0"

LEGEND

- 2 X 4 RECESSED FLUORESCENT LIGHT FIXTURE
- 1 X 4 SURFACE MOUNTED FLUORESCENT LIGHT FIXTURE
- CEILING MOUNTED FLUORESCENT LIGHT FIXTURE
- WALL MOUNTED FLUORESCENT LIGHT FIXTURE
- WALL MOUNTED LIGHT FIXTURE - SEE ELECT.
- EXIT LIGHT. SEE ELECT.
- IONIZATION - HEAT DETECTORS SEE ELECT.
- EXHAUST GRILLE- SEE MECH.
- SUPPLY GRILLE- SEE MECH.
- SPRINKLER HEAD SEE MECH.
- SIDE WALL SPRINKLER SEE MECH.
- 9'-0" CEILING HEIGHT

MCM ARCHITECTS
A PROFESSIONAL CORPORATION
1022 SOUTHWEST SALMON SUITE 350
PORTLAND, OREGON 97205-2447 USA
TELEPHONE 503 222 5757 FAX 503 241 1514

PROJECT:
HEAD START CENTER

WARRENTON/ASTORIA

PROJECT NO.: 94084
FILE NO.: A7.dwg
DATE: JUNE 15, 1995

REVISIONS:	DATE:	DESCRIPTION:

SHEET TITLE:
REFLECTED CEILING PLAN

SHEET NO.: A7

REGISTERED ARCHITECT 1261 MICHAEL J. MYLES Portland, Oregon STATE OF OREGON

© 1995 MCM ARCHITECTS ALL RIGHTS RESERVED
REPRODUCTION OF THIS DRAWING IS EXPRESSLY FORBIDDEN WITHOUT THE SPECIFIC WRITTEN PERMISSION OF MARCY AND CHRISTOPHER MYLES ARCHITECTS P.C. THIS DRAWING IS ONLY CONDITIONALLY ISSUED AND NEITHER RECEIPT NOR POSSESSION THEREOF GIVES BY WRITTEN AGREEMENT NOTE, OR WRITTEN PERMISSION AND CONSENT OF MCM ARCHITECTS P.C. THIS DRAWING OR ANY PART THEREOF, UNLESS

GENERAL NOTES

GENERAL
1. These notes set minimum standards for construction. The drawings govern over the General Notes to extent shown.
2. Contractor shall verify all dimensions and conditions on drawings and in the field. Coordinate locations of openings through floors, roof and walls with architectural, mechanical and electrical plans. Notify design agency of any discrepancies.
3. Contractor shall provide all necessary temporary support prior to completion of vertical and lateral load systems.
4. First floor shall be permanently attached to walls prior to back filling against structure.
5. Where reference is made to ASTM, AISC, ACI or other standards, the latest issue shall apply.
6. All work shall be in strict compliance with the Uniform Building Code as amended by the State of Oregon and all other state and local codes and building requirements that apply.
7. Design Criteria:
   a. Basic Roof Load (snow) — 25#/sq.ft. (snow build up loading as per SEAO snow load analysis)
   b. Floors
      Classrooms — 40#/sq.ft.
      Kitchen — 75#/sq.ft.
   c. Wind — 80 mph, Exposure "B"
   d. Seismic — Zone 3
8. Mechanical equipment, mechanical and sprinkler piping larger than 2" diameter or other items producing a hanger load over 50# shall be hung by a system approved by the design agency. Any hanger producing a load over 200# shall have additional framing installed to transfer these loads to the main structural beams or walls unless otherwise approved.
9. Shop drawings shall be required on reinforcing steel, glue laminated members, fabricated joists, metal plate connected trusses and shall be reviewed prior to fabrication.

FOUNDATIONS
1. Design soil pressure assumed to be 2000 psf LL plus DL (per soil's engineer recommendation).
2. All footings to bear on approved compacted fill minimum 18" below final grade. Notify design agency before proceeding if any unusual conditions are encountered in the footing excavations.
3. Do not excavate closer than a 2:1 slope below footings.
4. Clean all footing excavations of loose material by hand.
5. Excavations may be made under continuous footings for pipes. Backfill to be approved by engineer.
6. The foundation investigation report showing logs of borings and other pertinent data is available at the architect's office for inspection by all qualified bidders.

CONCRETE
1. Average concrete strength as determined by job cast lab cured cylinders at 28 days (plus increase depending upon the plant's standard deviation as specified in ACI 318-77) shall be: 3000 psi for all uses.
2. Minimum Mix Requirements:
   a. Cement content per yard: 5 sacks @ 3000 psi
   b. Slump: 2 to 4 inches. Deviation from design slump +1/2" to -1".
   c. Air Entrainment: Per ACI at all exterior slabs.
   d. Admix: Water reducing admix (Pozzolith or equal) for all slabs.
3. Place and cure all concrete per ACI codes and standards.
4. Provide control joints in all slabs on grade at 20'-0" o.c. each way maximum unless otherwise shown on plans. Provide heavy (3/4") tooled joints at 5'-0" o.c. and 1/2" premolded expansion joints at 30'-0" o.c. in all exterior walks and slabs.

REINFORCING
1. All reinforcing steel for concrete shall conform to U.B.C. standards No. 26-4-76 and ASTM A615 grade 60 for all uses.
2. All welded reinforcing steel shall conform to ASTM A706.
3. Fabricate and install reinforcing steel according to the "Manual of Standard Practice for Detailing Reinforced Concrete Structure" ACI Standard 315.
4. Provide 2'-0" x 2'-0" corner bars to match horizontal reinforcing in walls and footings at all corners and intersections.
5. Splices in wall and slab reinforcing shall be lapped 30 diameters and shall be staggered at least 4' at alternate bars.
6. Provide two #4 continuous bars at top and bottom of all walls unless noted otherwise on plan.
7. Provide dowels from footings to match all vertical wall, pilaster, and column reinforcing. Lap 30 diameters or 2'-0" minimum.
8. Lap all bars in intersecting footings 2'-0" or 30 diameters, whichever is greater.
9. All welded wire fabric shall conform to ASTM specification A-185-73.
   a. All wire fabric shall be supplied and laid in flat sheets and shall be chaired to proper position in slabs.
10. Reinforcing shall not be bent or displaced for the convenience of other trades unless approved by the structural engineer.
11. Minimum cover from concrete surfaces to reinforcing steel shall be:
    3" — 1/2" to bottom of footing
    1 1/4" from top in slabs on grade
    Center of wall
12. Electrical conduit shall be placed near center of slab.

WOOD FRAMING
1. All laminated beams to be Douglas Fir/Larch 24F-V4 (at simple span beams) and Douglas Fir/Larch 24F-V8 (at cantilever beams) per AITC specification. Appearance grade to be industrial.
2. All glue laminated members shall be notched, shaped and finished as per plans and specifications and shall be fabricated with waterproof glues.
3. Erection of members shall conform to AITC specifications No. 105-65.
4. All lumber species and grades to be as follows:
   a. Joists, beams and stringers — Douglas Fir #2
      6" nom. & greater beams & stringers — Douglas Fir #1
   b. Blocks, blocking, bridging & misc — Doug Fir or Hem Fir #3
   c. 2 x 4 studs — Doug Fir "studs" or std & better or #2
   d. 2 x 6 studs and larger — Douglas Fir #2
   e. Sills, ledgers, plates, etc. embedded in or in contact with concrete — Press treated Hem Fir #2
   f. Posts — Douglas Fir #1
5. Crossbridge or solid block at 8'-0" maximum o.c. for solid sawn joist 2 x 12 and larger.
6. Framing anchors, joist hanger, post caps, etc. to be "Simpson" or approved equal.
7. All bolt heads and nuts bearing on wood to be provided with a washer.
8. All nailing to be per table 25Q of the U.B.C. Nails called for on the drawings are to be common.
9. Cutting and notching of joists not allowed. 1" diameter hole may be drilled in the center 1/3 of the member depth. All other holes to be approved.
10. Studs may be notched in the lower 1/5 of the height of stud for electric and plumbing pipes, but no part of notch is to be deeper than 25% of width of stud. Holes of diameters up to 1/3 of width of stud may be drilled in studs but not in center 1/3 of their height.
11. Sheathing to be APA rated with exterior glue, nominal size as noted on the drawings. Install roof and floor sheathing with face grain perpendicular to supports and stagger end joints. Install wall sheathing either horizontal or vertical and block all edges of sheathing with 2 x 4 or thicker blocking. Block roof sheathing where noted on drawings. See plans for nailing schedule.

LIGHT METAL PLATE CONNECTED WOOD TRUSSES
1. Trusses shall comply with U.B.C. standard No. 25-17-76 and all provisions of the design specifications for light metal plate connected wood trusses of the truss plate institute TPI-85 except as otherwise noted.
2. Members shall not exceed a live load deflection of L/360 or working stresses for the appropriate material for the loads indicated on the drawings.
3. Truss manufacturer shall furnish complete engineering shop drawings with Oregon registered professional engineer's seal. Shop drawings shall show clearly erection plan, loadings (typical and special), truss types, and bracing requirements.
4. The truss manufacturer shall submit certificates from an independent testing company that all trusses delivered to job site conform to approved shop drawings. Cost of all test certificates shall be borne by the truss manufacturer.
5. Connect all trusses to supporting members with 1-Simpson H2.5 and A34 unless otherwise shown.
6. Truss erector shall exercise extreme care during erection of roof trusses to prevent the trusses from buckling laterally. Use spreader bars for lifting trusses and provide lateral bracing as necessary.
7. Truss manufacturer to inspect all trusses after they have been erected and roof sheathing, bridging, blocking, etc. has been installed. Manufacturer to submit certificate to engineer that the inspection was made and that trusses are in acceptable condition and meet with the manufacturer's design and installation requirements.

PREFABRICATED FLOOR JOISTS
1. All roof and floor members shall be manufactured by Trus Joist Macmillan Corp.
2. All joists shall conform to all provisions of the 1991 Uniform Building Code.
3. Joist shall not exceed a live load deflection of (Floor: L/480) or the working stresses as shown in the U.B.C. standards for appropriate materials for the loads indicated on the drawings.
4. Joist manufacturer shall furnish complete engineering shop drawings with Oregon registered professional engineer's seal.
5. TJI series:
   Manufacturer shall furnish all end and intermediate stiffeners.
   Blocking and/or shear panels, and metal bridging assemblies as required to provide a complete floor or roof structural system.
6. All bridging, bearing hardware, blocking, hangers, etc. that connect to the joists shall be per Trus Joist Corp. standard details.
7. Erector shall exercise extreme care during erection of joists to prevent them from buckling laterally. Provide lateral bracing as necessary.
8. Manufacturer to inspect all trusses after they have been erected and sheathing, bridging, blocking, etc. has been installed. Manufacturer to submit certificate to engineer that the inspection was made and that joists are in acceptable condition and meet with the manufacturer's design and installation requirements.

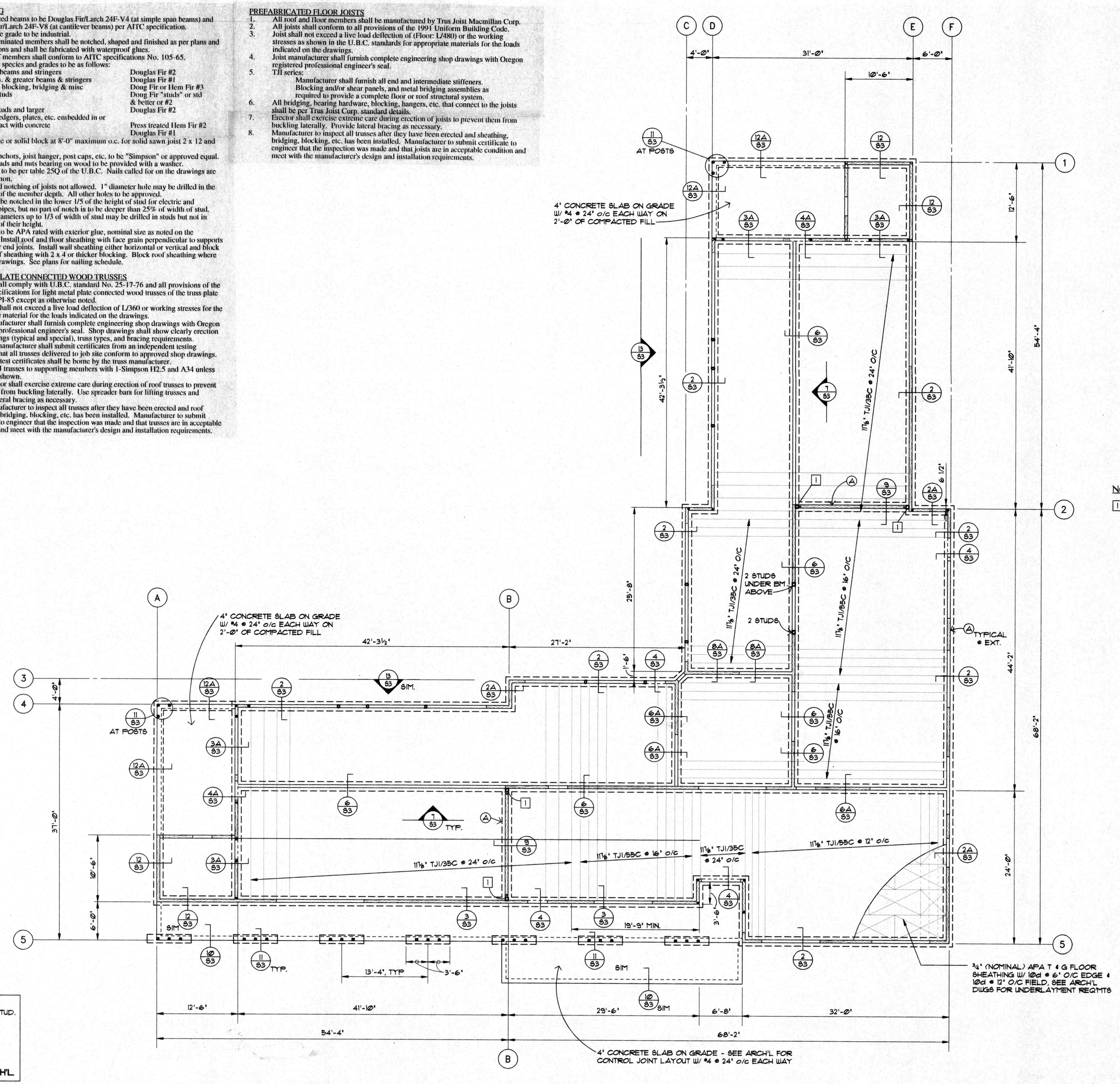

NOTES:
1. 6x6 POST WITH SIMPSON HDSA HOLDDOWN - SEE 9/S3

SHEAR WALL SCHEDULE		
MARK		
A	½" PLYWD. INDEX 24/0 (BLOCK EDGES) W/ 10d @ 4" o/c EDGES 10d @ 12" o/c FIELD	TYPICAL @ EXTERIOR

NOTE:
ALL DIMENSIONS ARE TO FACE OF STUD. FACE OF CONCRETE IS AT FACE OF SHEATHING, SEE 2/S3

DO NOT SCALE FROM DRAWINGS. VERIFY ALL DIMENSIONS WITH ARCH'L.

REGISTERED PROFESSIONAL ENGINEER 8980 OREGON JULY 16, 1976 WILLIAM G. BERRY

FOUNDATION / FIRST FLOOR FRAMING PLAN

1/8" = 1'-0"

N

BERRY-NORDLING ENGINEERS, INC.
701 S.E. MILLER STREET
PORTLAND, OREGON 97202
PHONE (503)231-0717
FAX (503)231-0718

PROJECT: HEAD START CENTER

WARRENTON / ASTORIA

PROJECT NO.: 94-409
FILE NO.: S2 . DWG
DATE: JUNE 16, 1995
REVISIONS: DATE: DESCRIPTION:

SHEET TITLE: FOUNDATION / FIRST FLOOR FRAMING PLAN

SHEET NO. S1

1" ORIGINAL SIZE

1/S2

NOTES:

1. PROVIDE 2x4 FLAT BLOCKING AT ALL HIPS AND VALLEYS. EDGE NAIL PLYWOOD TO BLOCKING.
2. SHADING INDICATES OVERBUILT AREA. ADD 5 PSF TO TOP CHORD LOADING.
3. ALL GLU-LAM BEAMS SHOWN HAVE ZERO CAMBER (C=0) UNLESS NOTED OTHERWISE.
4. HEADER - 4x6.
5. SHORE THIS CORNER UNTIL WALL ABOVE HAS BEEN SHEATHED.
6. SKYLIGHTS - SEE ARCH'L.

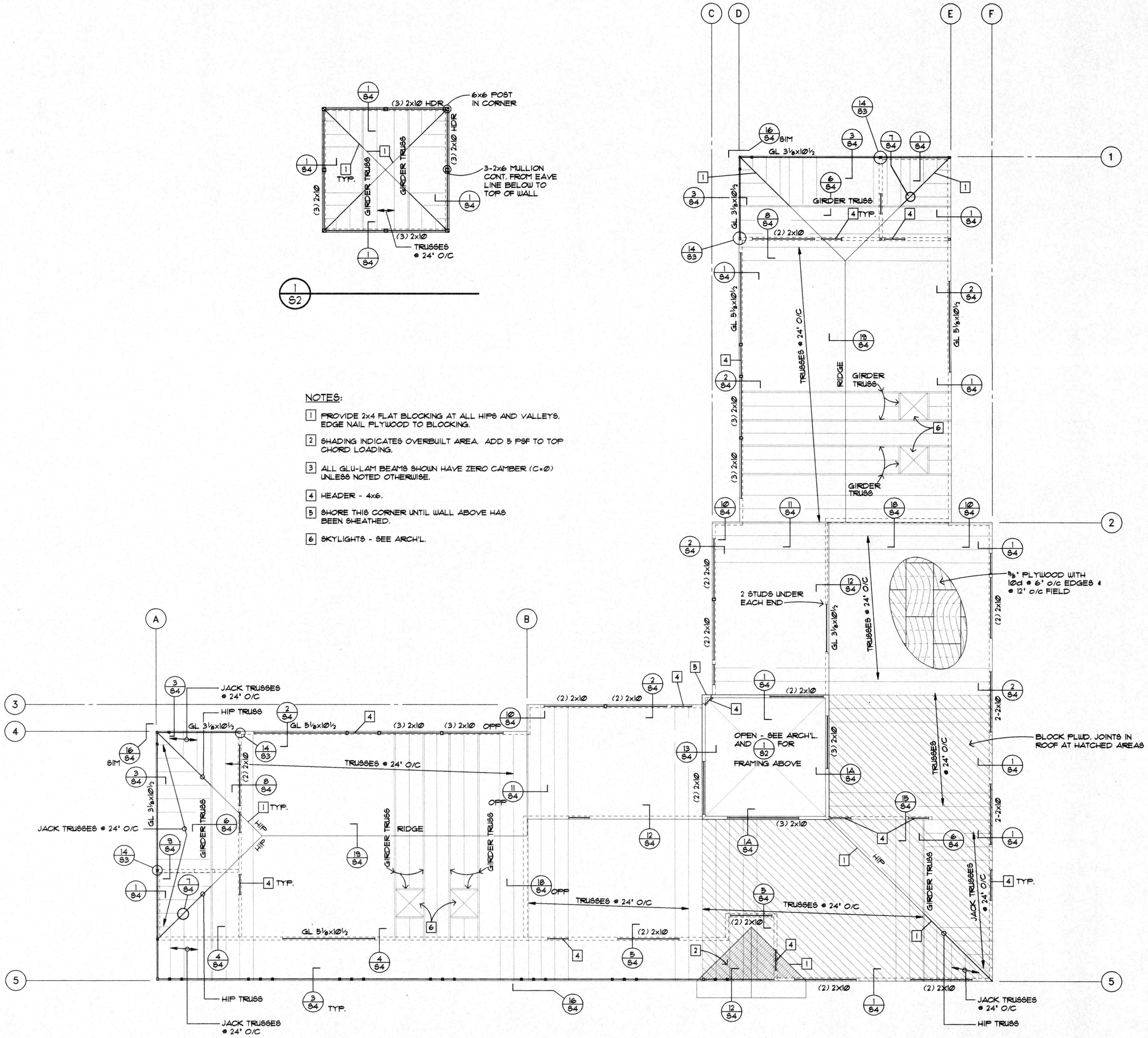

ROOF TRUSS DESIGN LOADS:

TOP CHORD 25 PSF LIVE LOAD
10 PSF DEAD LOAD

BOTTOM CHORD 5 PSF DEAD LOAD

ROOF FRAMING PLAN

1/8" = 1'-0"

N

REGISTERED PROFESSIONAL ENGINEER 5980 OREGON JULY 30, 1979 WILLIAM G. BERRY

1" ORIGINAL SIZE

BERRY-NORDLING ENGINEERS, INC.
701 S.E. MILLER STREET
PORTLAND, OREGON 97202
PHONE (503)231-0717
FAX (503)231-0718

PROJECT: HEAD START CENTER

WARRENTON / ASTORIA

PROJECT NO.: 94-409
FILE NO.: S2.DWG
DATE: JUNE 15, 1995

REVISIONS:	DATE:	DESCRIPTION:

SHEET TITLE: ROOF FRAMING PLAN

SHEET NO.: S2

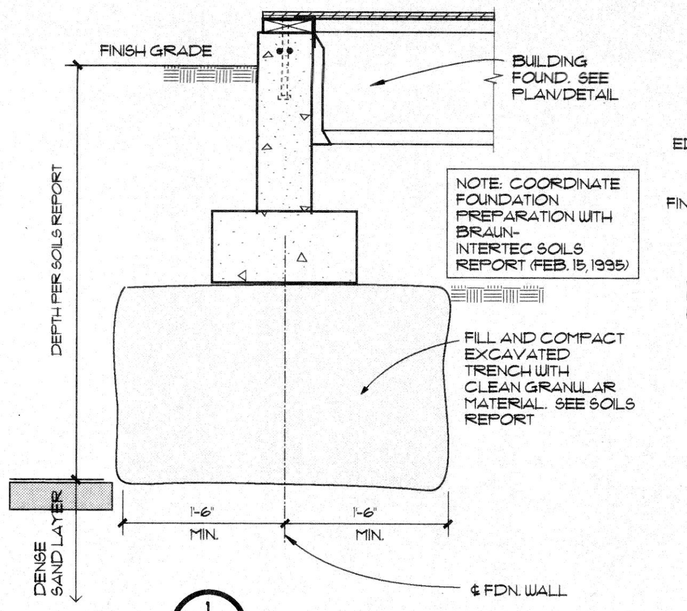

1 S3 — 1/4" = 1'-0"

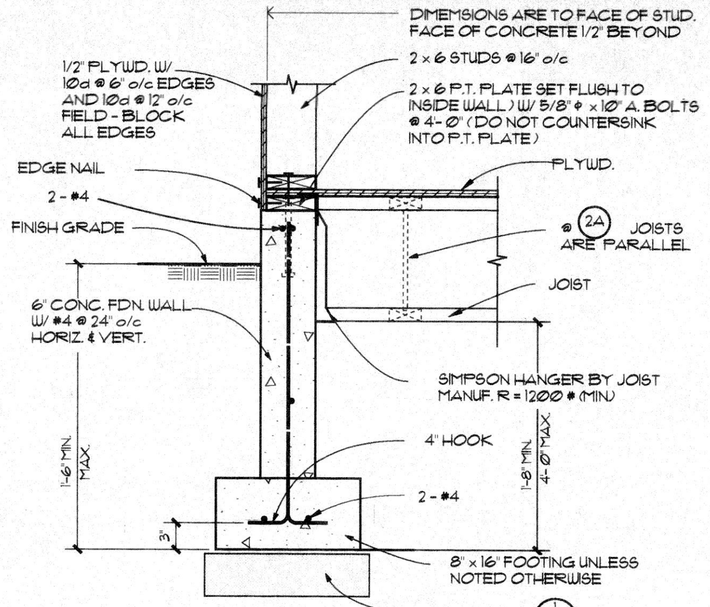

2 S3 2A S3 — 1" = 1'-0"

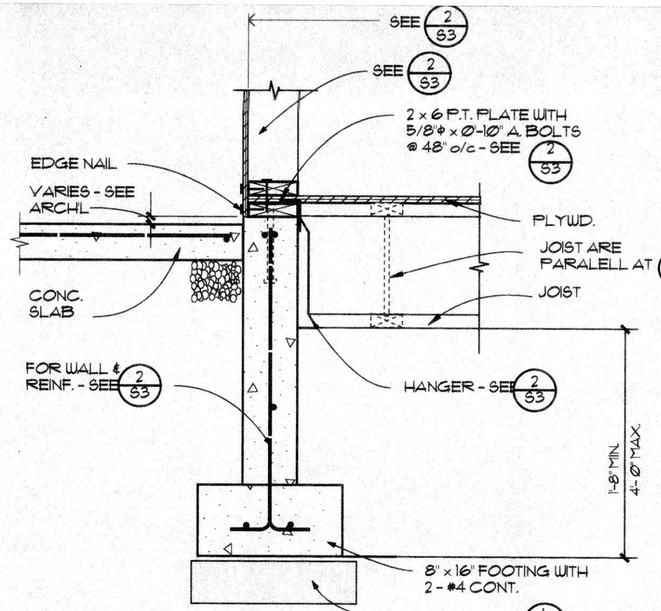

3 S3 3A S3 — 3" = 1'-0"

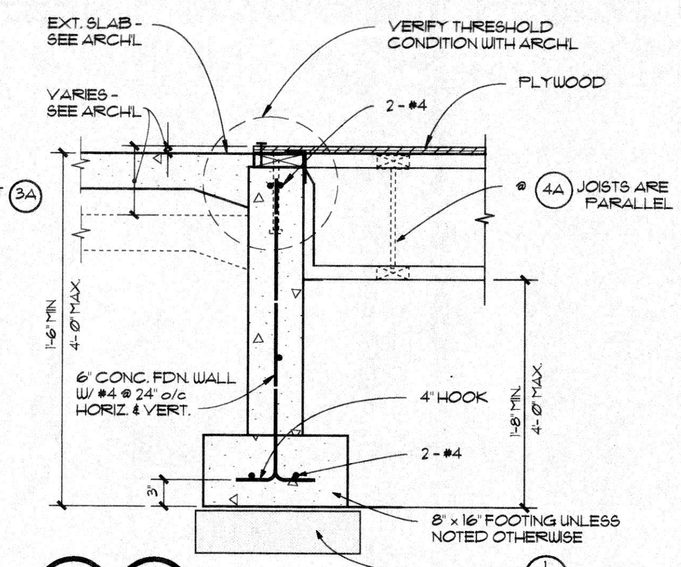

4 S3 4A S3 — 1" = 1'-0"

NOT USED

5 S3 — 1" = 1'-0"

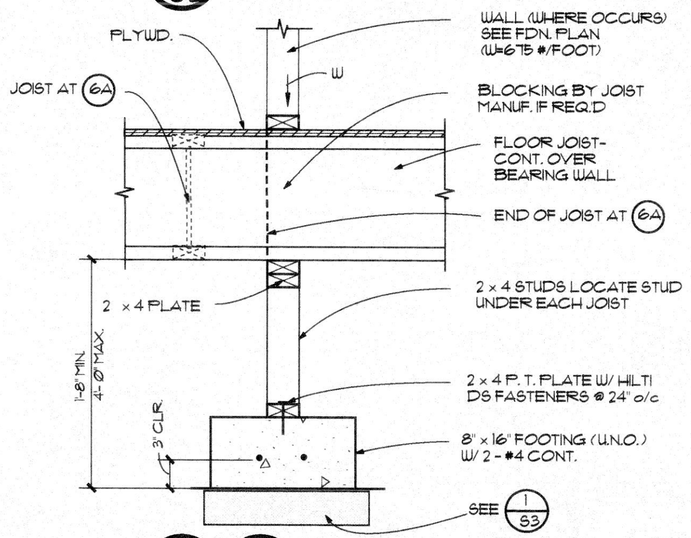

6 S3 6A S3 — 1/4" = 1'-0"

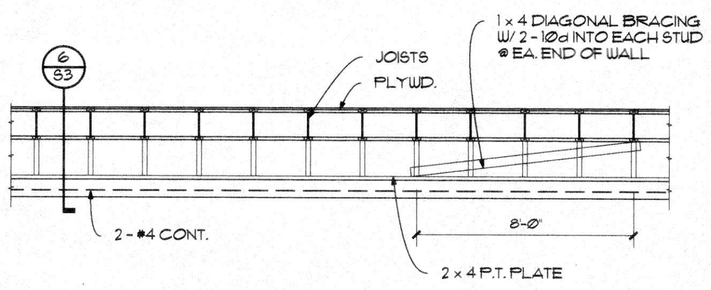

ELEVATION

7 S3 — 1" = 1'-0"

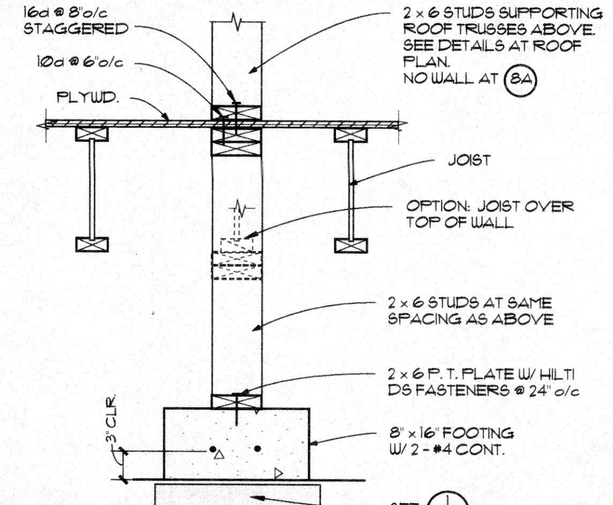

8 S3 8A S3 — 1" = 1'-0"

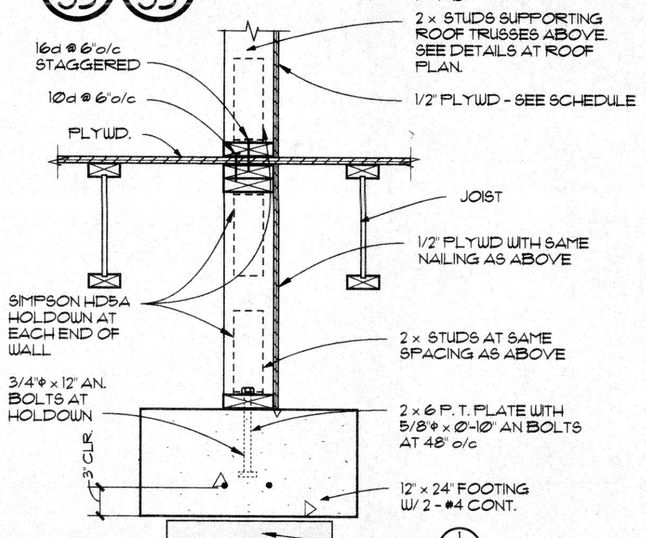

9 S3 — 1" = 1'-0"

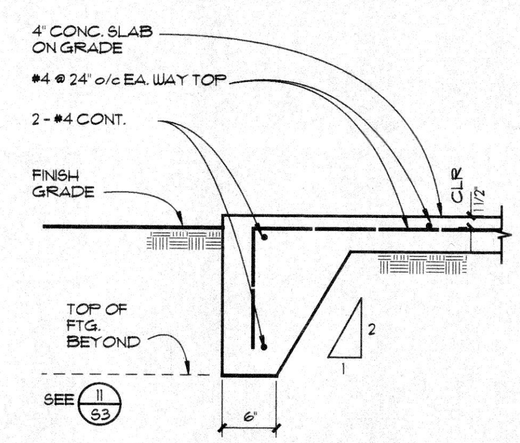

10 S3 — 1" = 1'-0"

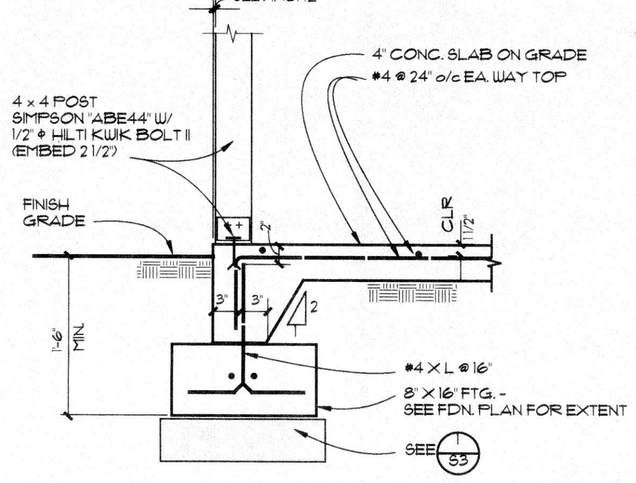

11 S3 — 1" = 1'-0"

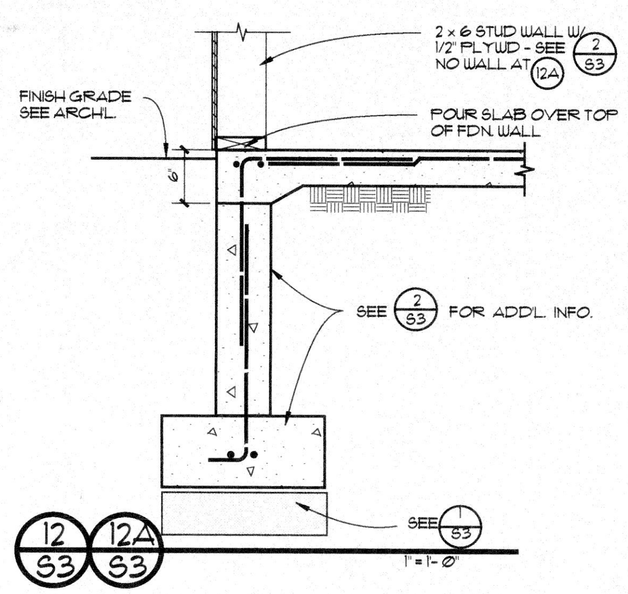

12 S3 12A S3 — 1" = 1'-0"

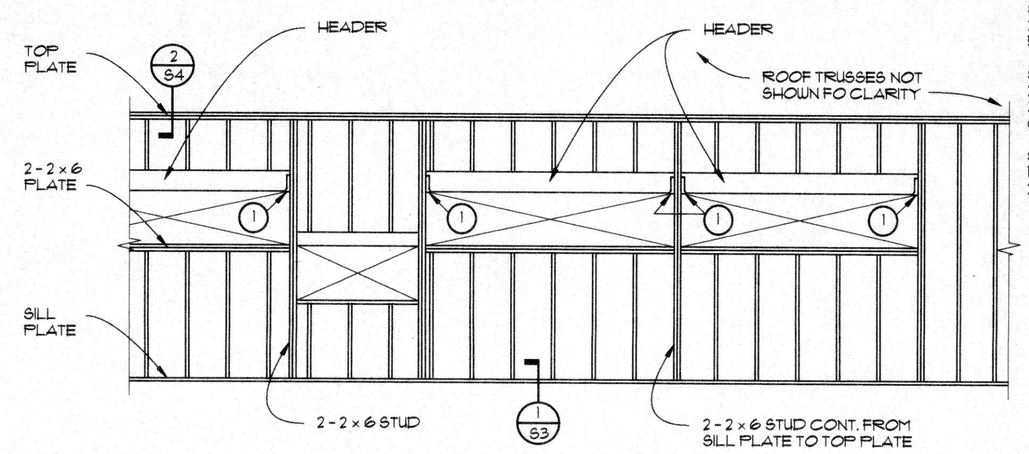

NOTE 1:
SIMPSON HUC 5/125/12 (OR 2 - 2x6 CRIPPLE) AT 5 1/8 x 10 1/2 HEADER

SIMPSON HUC 5/125/12 (OR 2 - 2 x 6 CRIPPLE) AT 3 - 2 x 10 HEADER (WITH 5/8" PLYWD SHIM)

SIMPSON HUSC 212-2 (OR 1 - 2 x 6 CRIPPLE) AT 2 - 2 x 10 HEADER

13 S3 — WALL ELEVATION — 1/4" = 1'-0"

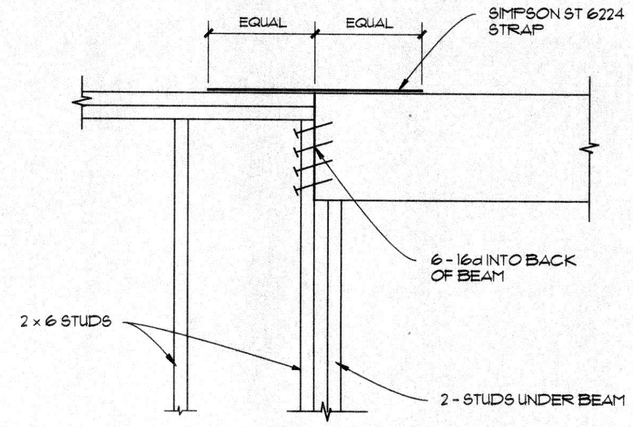

14 S3 — 1" = 1'-0"

BERRY - NORDLING ENGINEERS, INC.
701 S.E. MILLER STREET
PORTLAND, OREGON 97202
PHONE (503) 231-0717
FAX (503) 231-0718

PROJECT:
HEAD START CENTER

WARRENTON / ASTORIA

PROJECT NO.: 94 - 499
FILE NO.: S3 DWG
DATE: JUNE 15, 1995

REVISIONS:	DATE:	DESCRIPTION:

SHEET TITLE:
DETAILS

SHEET NO.: S3

REGISTERED PROFESSIONAL ENGINEER — OREGON — JUL 20, 1978 — WILLIAM G. BERRY

PLUMBING CONNECTION SCHEDULE

MARK	DESCRIPTION	W	V	CW	HW	140 HW	REMARKS
WC-1	WATER CLOSET, CHILD USE FLOOR MOUNTED 1.6 GPM FLUSH VALVE	4"	2"	1"	-	-	JUNIOR SIZE FIXTURE
WC-2	WATER CLOSET 1.6 GPM FLUSH VALVE FLOOR MOUNTED	4"	2"	1"	-	-	
WC-3	HANDICAPPED MOUNTING WATER CLOSET 1.6 GPM FLUSH VALVE FLOOR MOUNTED	4"	2"	1"	-	-	COORDINATE FLUSH VALVE LOCATIONS WITH GRAB BARS
WC-4	WATER CLOSET, CHILD USE FLOOR MOUNTED 1.6 GPM FLUSH VALVE	4"	2"	1"	-	-	WITH FIXTURE CARRIER
L-1	LAVATORY CHILD USE COUNTER MOUNTED	2"x1½"	1½"	½"	½"	-	SELF CLOSING FAUCETS WITH 110°F TEMPERATURE LIMIT DEVICE. HANDICAPPED TRIM
L-2	LAVATORY HANDICAPPED TRIMMED WALL MOUNTED	2"x1½"	1½"	½"	½"	-	SELF CLOSING FAUCETS WITH 110°F TEMPERATURE LIMIT DEVICE.
DF-1	DRINKING FOUNTAIN KINDERGARTEN MOUNTING WALL MOUNTED - SINGLE UNITS	1½"x1¼"	1½"	½"	-	-	WITH FIXTURE CARRIER MOUNTING PLATE MODEL #7100.4 WITH ALL-THREAD STUDS. PROTECT STUDS DURING CONSTRUCTION.
DF-2	DRINKING FOUNTAIN HANDICAPPED MOUNTING WALL MOUNTED - DUAL UNITS	(2) 1½"x1¼"	(2) 1½"	(2) ½"	-	-	WITH FIXTURE CARRIER MOUNTING PLATE MODEL #7100.4 WITH ALL-THREAD STUDS. PROTECT STUDS DURING CONSTRUCTION.
S-1	TEACHER SINK IN CLASSROOM ADULT CLASSROOM SINK KITCHEN HANDWASH SINK	2"x1½"	1½"	½"	½"	-	
S-2	DIAPER CHANGE SINK COUNTER MOUNTED	2"x1½"	1½"	½"	½"	-	
S-3	MOP SINK BASIN FLOOR MOUNTED	3"	2"	½"	½"	-	PROVIDE BACKING FOR FAUCET
S-4	3 COMPARTMENT POT/PAN SINK WITH GARBAGE DISPOSAL AND PREWASH SPRAY ON RIGHT HAND TUB.	(3) 1½" 2"x3"	2"	(2) ¾"x½"	-	(2) ¾"x½"	SINK FURNISHED BY OWNER, INSTALLED BY CONTRACTOR. PROVIDE FAUCETS, SPRAY & FITTINGS. PROVIDE BACKING IN WALL FOR FAUCETS.
S-5	VEGETABLE PREP SINK WITH SPRAY	2x1½"	1½"	½"	-	½"	
DW	DISH WASHER	2" IW TO FS				¾" HB	DISHWASHER FURNISHED BY OWNER, INSTALLED BY CONTRACTOR. PROVIDE CONNECTIONS & FITTINGS & W.H.A.
FD	FLOOR DRAIN, COORDINATE EXACT LOCATIONS WITH THE ARCHITECT.	3"	2"	½"	-	-	PROVIDE TRAP PRIMER WITH ACCESS PANEL. PROVIDE BLOCKING & FRAMING FOR DRAIN SUPPORT.
FS	FLOOR SINK, WITH ½ GRATE & RIM FLUSH WITH FINISH FLOOR.	3"	2"	½"	-	-	COORDINATE EXACT LOCATION WITH KITCHEN CONSULTANT. PROVIDE TRAP PRIMER WITH SHUT OFF VALVE.
HB-1	EXTERIOR HOSE BIBB	-	-	¾"	-	-	PROVIDE BACKING IN WALL
F-1	WASHER/DRYER RECESSED CONNECTION BOX.	2"	1½"	½"	½"	-	PROVIDE GUY GRAY RECESSED WASHER/DRYER SUPPLY/DRAIN UNIT AND W.H.A.
H-1	KITCHEN HOOD W/ ANSUL FIRE PROTECTION	-	-	-	-	-	6' LENGTH BY DEPTH APPROPRIATE FOR 33" DEEP OPEN BURNER RANGE. GAS SOLENOID VALVE CONNECTION.

EQUIPMENT SCHEDULE

MARK	MANUFACTURER & MODEL	HEAD	GPM	H.P.	MBTUH	REMARKS
P-1	BELL & GOSSETT BG100AB	5	3	1/12		3/4" FLANGE
WH-1	AO SMITH BTC-120				120	75 GALLON

EXHAUST FAN SCHEDULE

MARK	MANUFACTURER & MODEL	CFM	SP/" WG	H.P.	TYPE	REMARKS
EF-1	PACE SCF-51A	375	.5	1/8	FC	HORIZONTAL DISCHARGE SUSPENDED FROM STRUCTURE BOTTOM ACCESS
EF-2	PACE SCF-63A	425	.5	1/8	FC	HORIZONTAL DISCHARGE SUSPENDED FROM STRUCTURE BOTTOM ACCESS
EF-3	PACE SCF-52A	265	.5	1/10	FC	HORIZONTAL DISCHARGE SUSPENDED FROM STRUCTURE BOTTOM ACCESS
EF-4	ILG UBC 150	1500	¾	.75	BI	UPBLAST GREASE EXHAUST ROOF FAN WITH EXTENDED CURB.

LEGEND

SYMBOL	ABBR.	DESCRIPTION
	W	SANITARY WASTE OR SOIL LINE
IW	IW	INDIRECT WASTE
	V	SANITARY VENT LINE
	CW	DOMESTIC COLD WATER LINE
	HW	DOMESTIC HOT WATER LINE
	HWR	DOMESTIC HOT WATER RETURN
RL	RWL	RAIN WATER LEADER
G	G	NATURAL GAS
	UN	UNION CONNECTION FITTING
	FLG	FLANGED CONNECTION
	FL	DIRECTION OF FLOW
	UP	PIPE 90° ELBOW UP
	DN	PIPE 90° ELBOW DOWN
	PA	PIPE ANCHOR
	PG	PIPE GUIDE
	GC	GAS COCK VALVE
	BFV	BUTTERFLY VALVE 2½" AND LARGER
	GV/BV	GATE VALVE OR BALL VALVE ½" TO 2"
	TB	THRUST BLOCK
	CKV	CHECK VALVE
	DV	DRAIN VALVE WITH HOSE NIPPLE
	STR	WYE STRAINER
	V	VALVE IN VALVE BOX
	HB	HOSE BIBB
	T & PRV	TEMP. & PRESSURE RELIEF VALVE
	RPBP / BFP	REDUCED PRESSURE BACKFLOW PREVENTER/BACKFLOW PREVENTER
	TH	THERMOMETER W/ WELL
	SA	SHOCK ABBRESTOR SENSOR PLUG
	PP	PRESSURE AND TEMPERATURE
	PRV/ GPRV	PRESS. REDUCING VALVE, CW OR G.
	WCO	CLEAN-OUT: WALL TYPE
	FCO	CLEAN-OUT: FINISH FLOOR TYPE
	GCO	CLEAN-OUT: FINISH GRADE TYPE
	CO	CLEAN-OUT: END OF LINE
	CP	CIRCULATING PUMP (INLINE)
	FD	FLOOR DRAIN
	AP	ACCESS PANEL / DOOR
	RD/OFRD	ROOF DRAIN / OVERFLOW ROOF DRAIN
	CB	CIRCUIT BETTER

SYMBOL	ABBR.	DESCRIPTION
	SAD	SUPPLY AIR DIFFUSER (ARROWS REPRESENT NUMBER & DIRECTION OF BLOWS)
	RAG/EAG	RETURN OR EXHAUST GRILLE
300 12x12-2 CS-1		CFM NECK SIZE (IN INCHES)-NO. OF BLOWS TYPE
	FLD	FUSIBLE LINK DAMPER
	OBD	OPPOSED BLADE DAMPER
HORIZONTAL VERTICAL	VD	VOLUME DAMPER
		2" LINED DUCTWORK (SEE SPECIFICATIONS)
	FLEX	FLEXIBLE DUCT
	STAT	ROOM TEMPERATURE SENSOR
U.C.	U.C.	UNDER-CUT DOOR
	EAD	EXHAUST AIR DAMPER
	OAD	OUTSIDE AIR DAMPER
	RAD	RETURN AIR DAMPER
	SAD	SUPPLY AIR DAMPER
	OBD	OPPOSED BLADE DAMPER
	DW	DISHWASHER
	WC	WATER CLOSET (TOILET)
	UR	URINAL
	LAV	LAVATORY
	SK	SINK
	GD	GARBAGE DISPOSAL
	4" @ ½"	PIPE SIZE @ INCHES OF SLOPE / FT.
	CI	CAST IRON PIPE
	PVC	PLASTIC PIPE
	VTR	VENT THROUGH ROOF
	A.F.F.	ABOVE FINISHED FLOOR
	EL.	ELEVATION
	I.E.	INVERT ELEVATION
	TYP.	TYPICAL / TYPICAL OF *
	FR.	FROM
	℄	CENTERLINE
	SS	SANITARY SEWER
	SD	STORM DRAIN
	DS	DOWNSPOUT (N.I.M.W.)
	N.I.C.	NOT IN CONTRACT
	N.I.M.W.	NOT IN MECHANICAL WORK
	NTS	NOT TO SCALE
	O.F.C.	OWNER FURNISHED, CONTRACTOR INSTALLED
	C.F.I.	CONTRACTOR FURNISHED & INSTALLED
	O.F.O.I.	OWNER FURNISHED, OWNER INSTALLED
	* N.I.C	KEY WALL SWITCH OR TOGGLE SWITCH NOT IN CONTRACT
	RD	ROOF DRAIN
	OF	OVERFLOW
	TMV	TEMPERED WATER MIXING VALVE

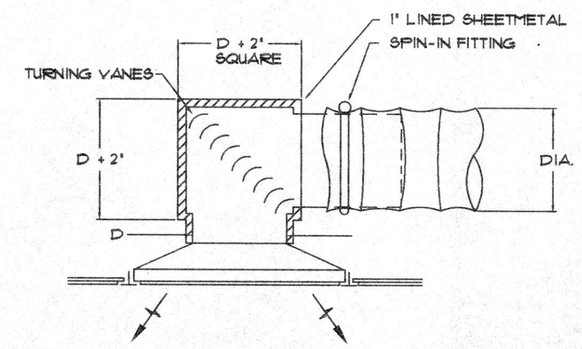

SUPPLY SHOWN, RETURN SIMILAR
(W / O TURNING VANES)

2 / M-1 DETAIL - SUPPLY / RETURN DIFFUSER
NOT TO SCALE

DRAWING INDEX

SHEET	DESCRIPTION	SCALE
M-1	LEGEND, SCHEDULES & DETAILS	NONE
M-2	FOUNDATION PLAN - MECHANICAL	1/8"=1'-0"
M-3	FLOOR PLAN - MECHANICAL	1/8"=1'-0"
M-4	CEILING/ATTIC PLAN - HVAC	1/8"=1'-0"

NOTES

NUMBER	DESCRIPTION
1.	COORDINATE THE WORK WITH ALL TRADES BUT IN PARTICULAR WITH THE ELECTRICAL AND FINISH TRADES.
2.	REFER TO ARCHITECTURAL & STRUCTURAL PLANS FOR EXACT LOCATIONS & DIMENSIONS.
3.	PLANS ARE TO BE CONSIDERED SCHEMATIC BUT LOCATE WORK AS CLOSE TO WHERE SHOWN WHEN PHYSICALLY POSSIBLE WITHOUT CONFLICT TO OTHER TRADES.
4.	OBTAIN ROUGH-IN DRAWINGS FOR OWNER FURNISHED EQUIPMENT PRIOR TO STARTING ROUGH-INS FOR EQUIPMENT.
5.	SEAL ALL PIPE & DUCT PENETRATIONS AS DETAILED AND / OR AS SPECIFIED.
6.	COORDINATE LOCATION OF TOILET ROOM FLOOR DRAINS WITH THE ARCHITECT TO AVOID PARTITION SUPPORT FEET.
7.	PROVIDE ACCESS DOORS FOR ALL VOLUME DAMPERS & VALVES ABOVE HARD CEILINGS.
8.	
9.	
10.	

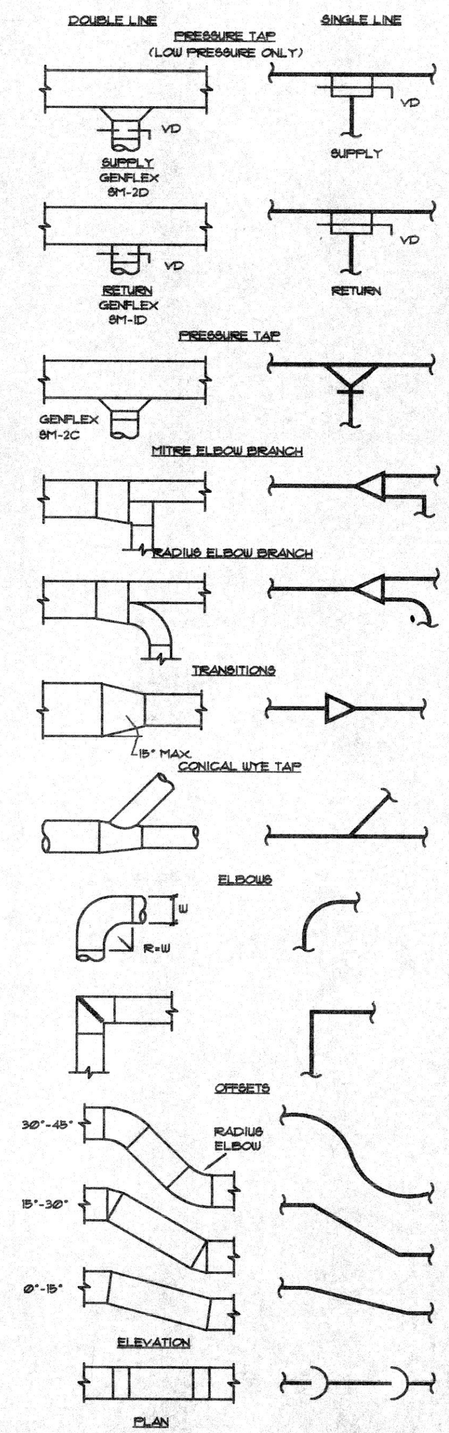

1 / M-1 TYPICAL DUCT FITTINGS
SCALE:NONE

CHRIS BILLINGS & ASSOCIATES
CONSULTING ENGINEERS
4445 S.W. BARBUR BLVD
PORTLAND, OR 97201
PH. (503)228-0008
FAX (503)228-2280

PROJECT :
HEAD START CENTER

WARRENTON/ASTORIA

PROJECT NO. : 95-0030
FILE NO. : HS-M-2.dwg
DATE : JUNE 1, 1995
REVISIONS : DATE : DESCRIPTION :

SHEET TITLE :
LEGEND, SCHEDULES AND DETAILS
SCALE: 1/8"=1'-0"
SHEET NO. : M-1

REGISTERED PROFESSIONAL ENGINEER 17231 OREGON JULY 19, 1994 JANETTE L. KEIRBO

EXPIRES 6/30/95

1" ORIGINAL SIZE

ue Jun 13 07:42:38 1995

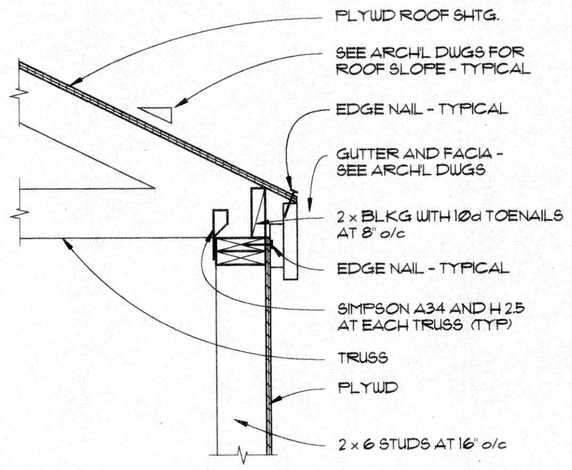

1 S4 — 1" = 1'-0"

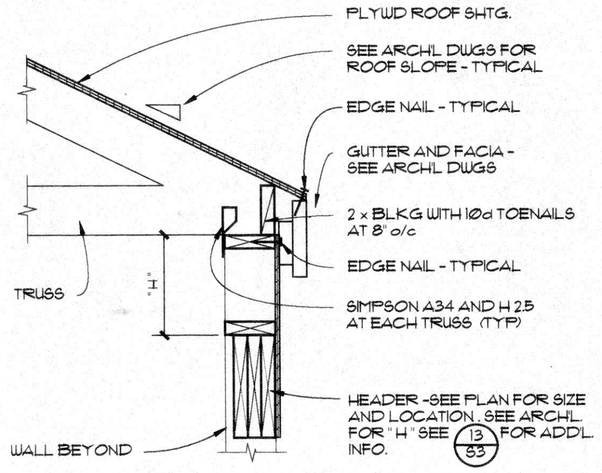

2 S4 — 1" = 1'-0"

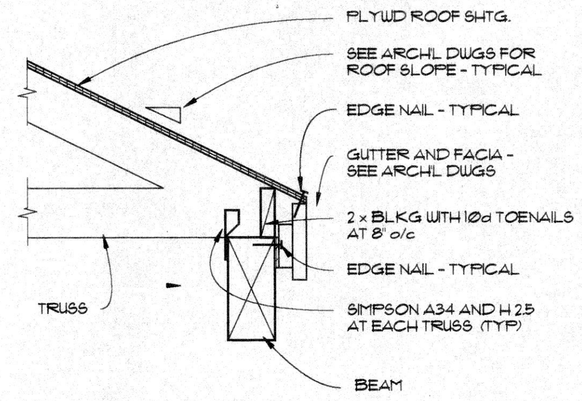

3 S4 — 1" = 1'-0"

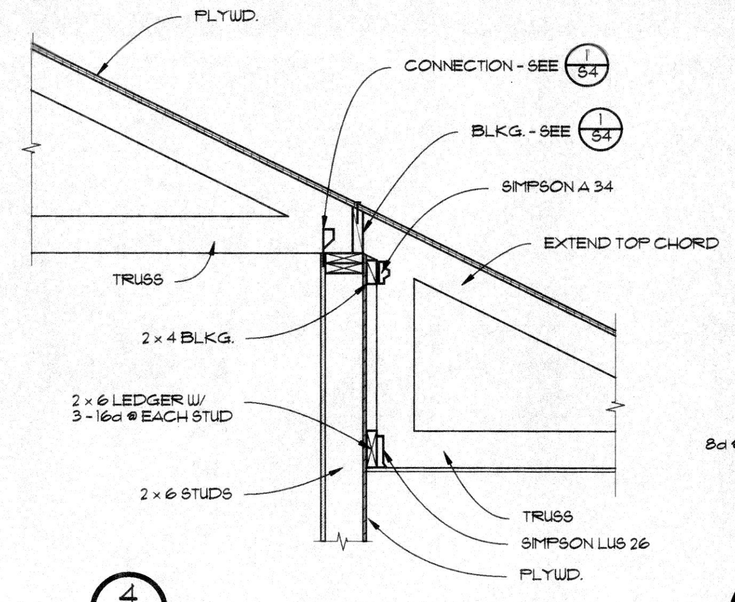

4 S4 — 3/4" = 1'-0"

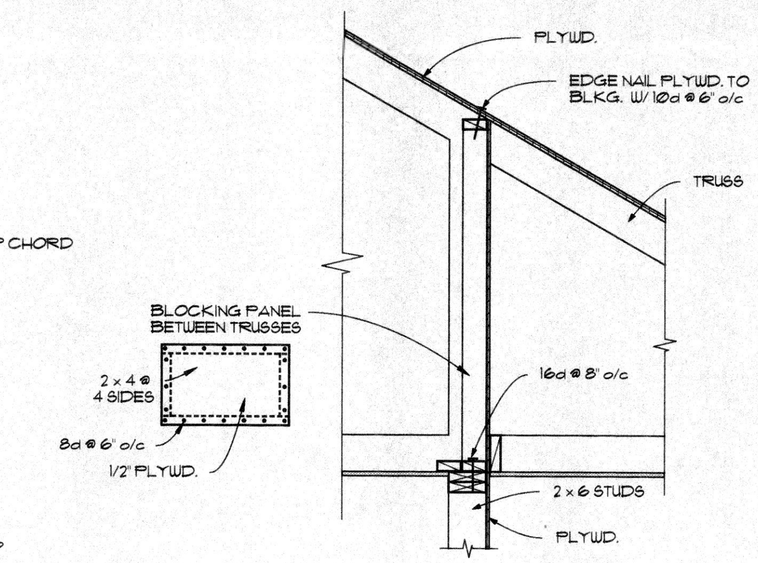

5 S4 — 3/4" = 1'-0"

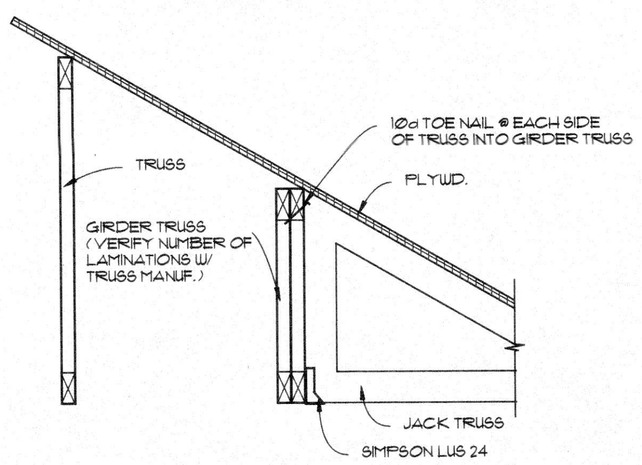

6 S4 — 1" = 1'-0"

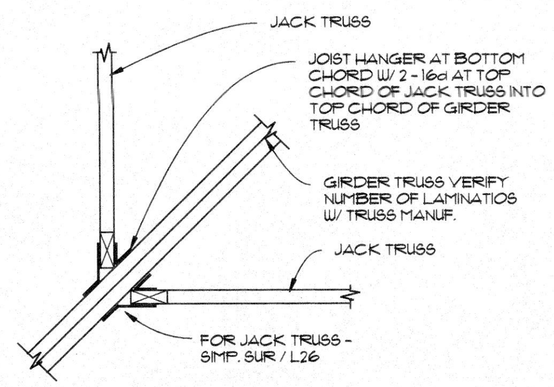

7 S4 — 1" = 1'-0"

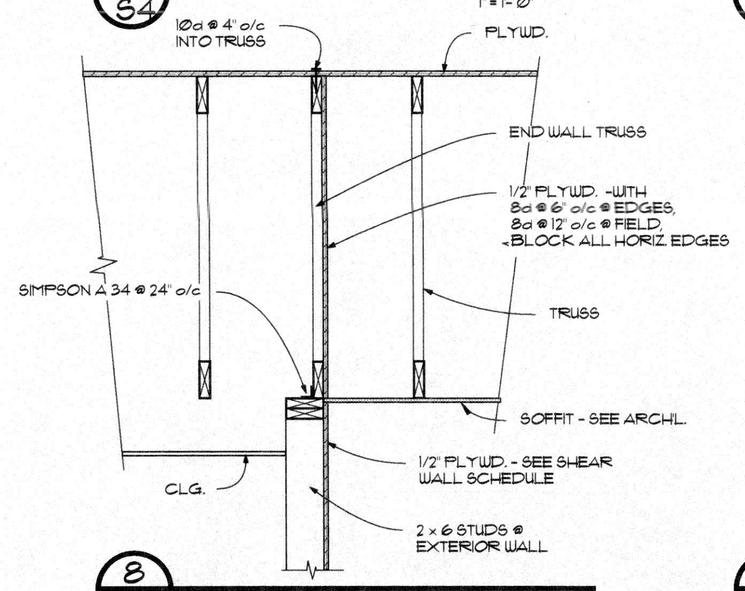

8 S4 — 1" = 1'-0"

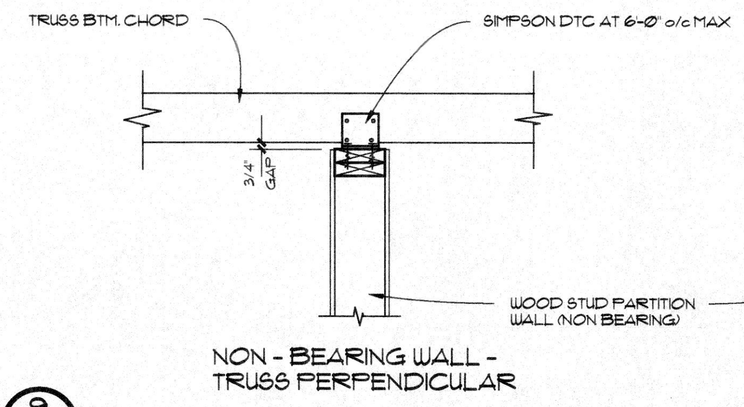

NON - BEARING WALL - TRUSS PERPENDICULAR

9 S4 — 1" = 1'-0"

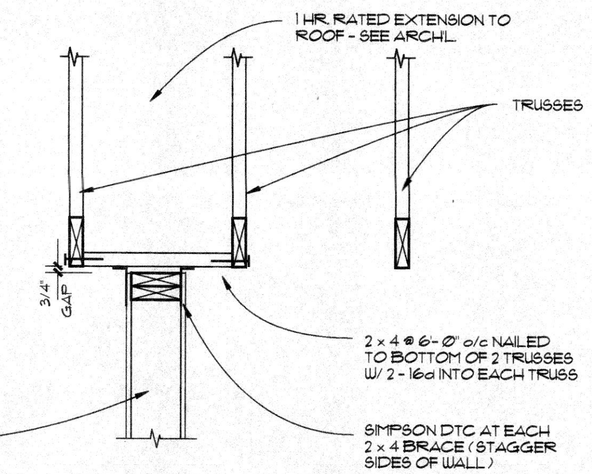

NON - BEARING WALL - TRUSS PARALLEL

9 S4 — 1" = 1'-0"

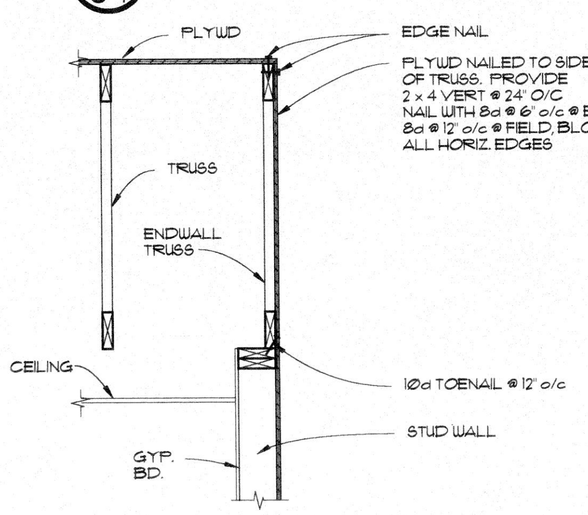

10 S4 — 1" = 1'-0"

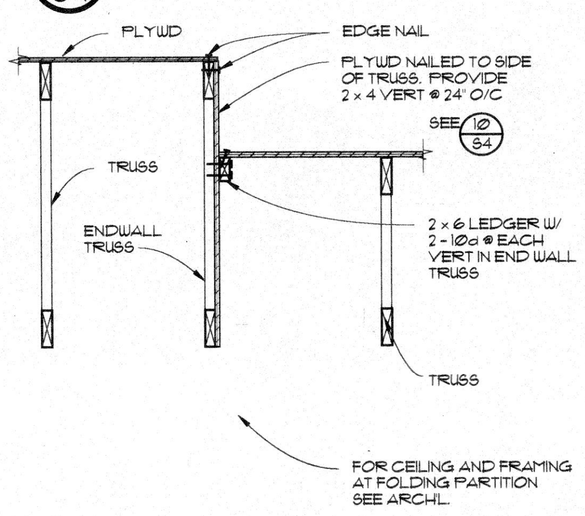

11 S4 — 1" = 1'-0"

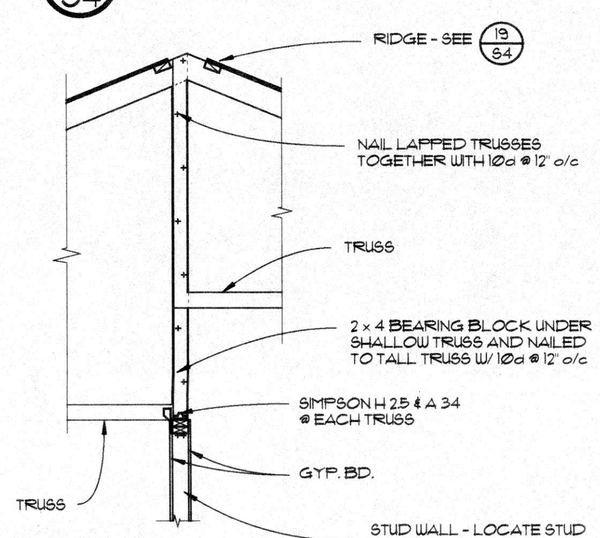

12 S4 — 1/2" = 1'-0"

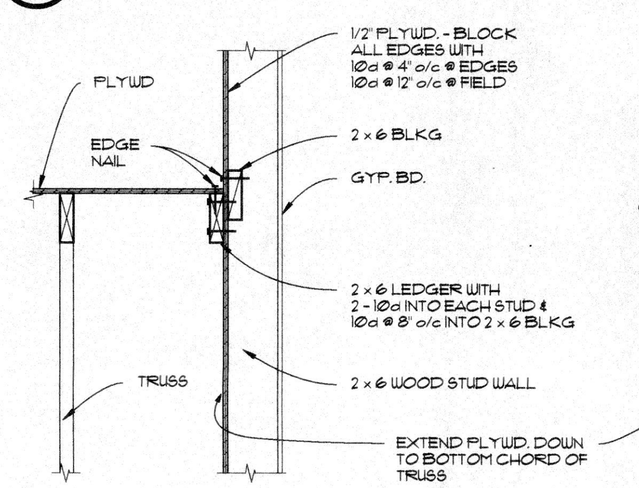

13 S4 — 1" = 1'-0"

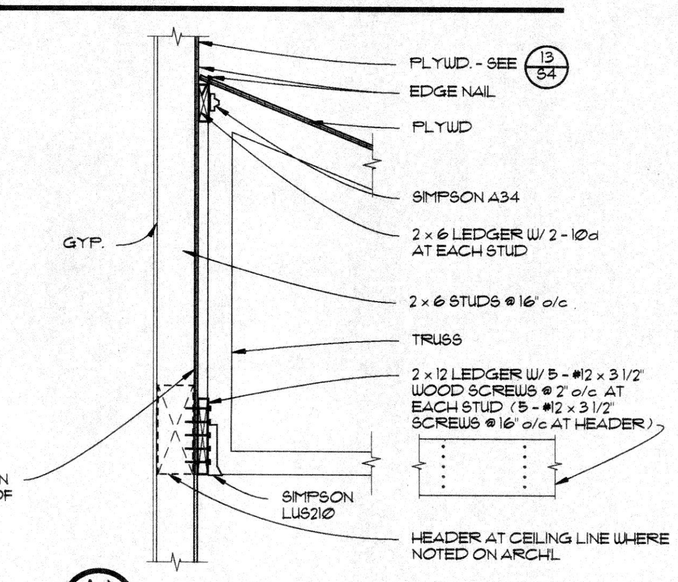

14 S4 — 3/4" = 1'-0"

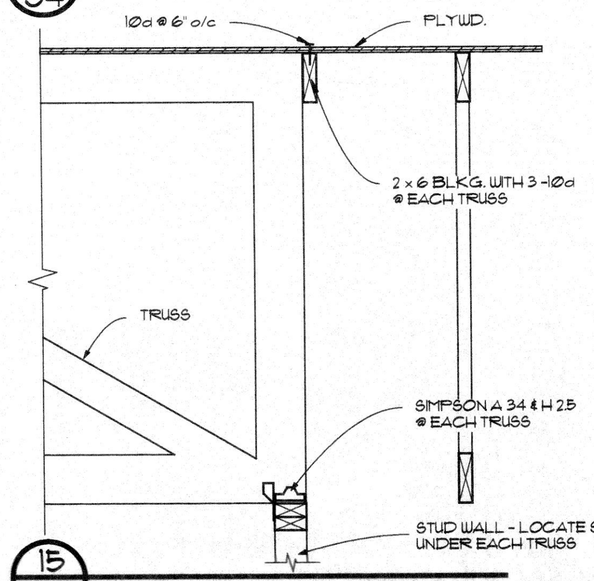

15 S4 — 1" = 1'-0"

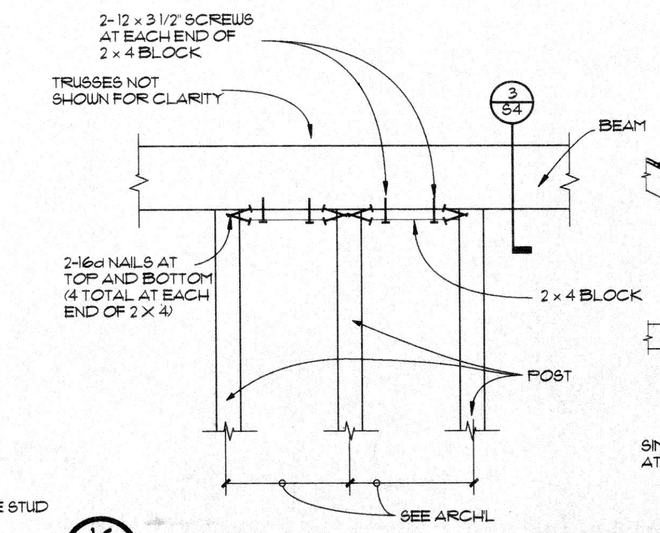

16 S4 — 1" = 1'-0"

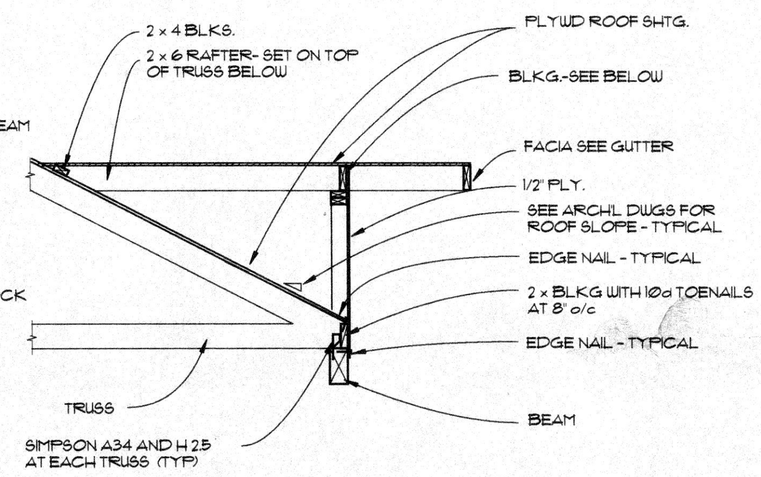

17 S4 — 1" = 1'-0"

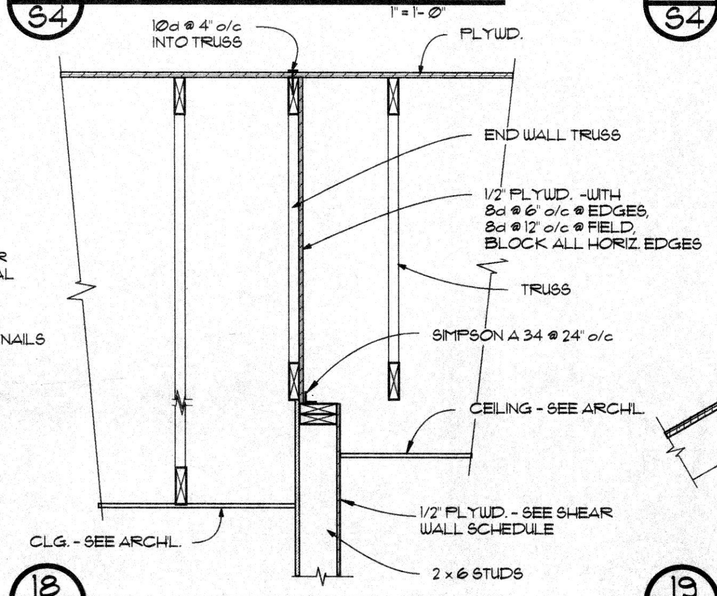

18 S4 — 1" = 1'-0"

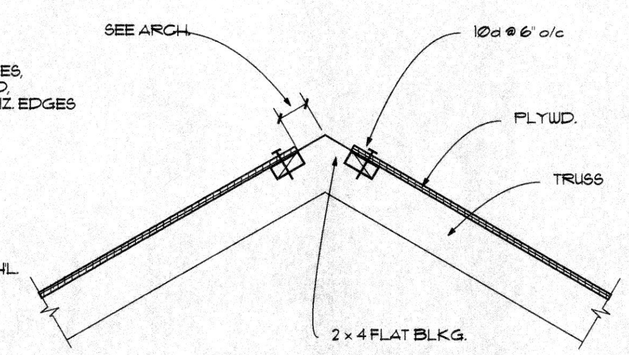

19 S4 — 1" = 1'-0"

REGISTERED PROFESSIONAL ENGINEER — OREGON — WILLIAM G. BERRY

BERRY - NORDLING ENGINEERS, INC.
701 SE MILLER STREET
PORTLAND, OREGON 97202
PHONE (503) 231-0717
FAX (503) 231-0718

PROJECT:

HEAD START CENTER

WARRENTON / ASTORIA

PROJECT NO.:	94 - 499
FILE NO.:	S4 DWG
DATE:	JUNE 15, 1995

REVISIONS:	DATE:	DESCRIPTION:

SHEET TITLE:

DETAILS

SHEET NO.: S4

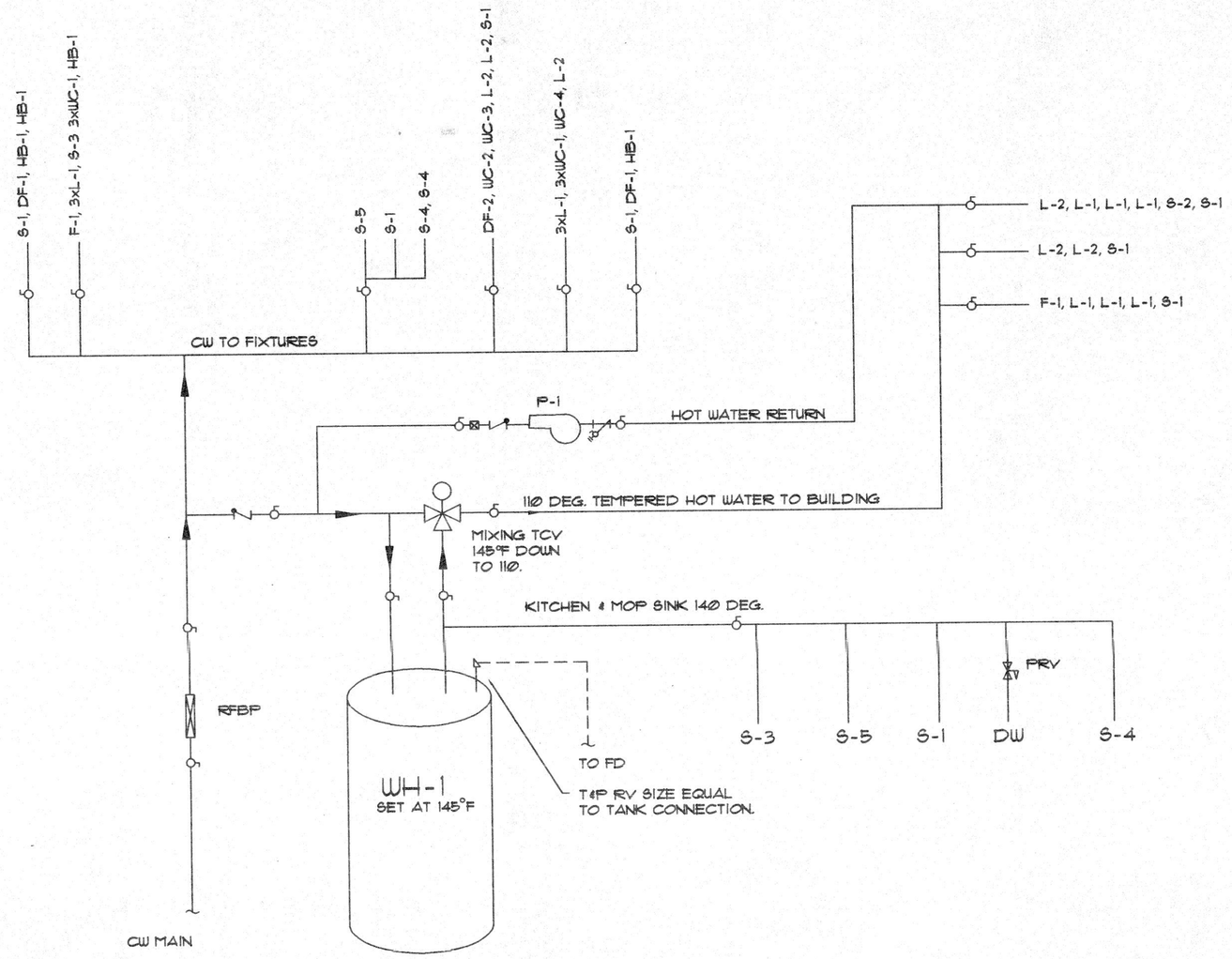

2 / M-2 DOMESTIC WATER FLOW DIAGRAM
SCALE: NONE

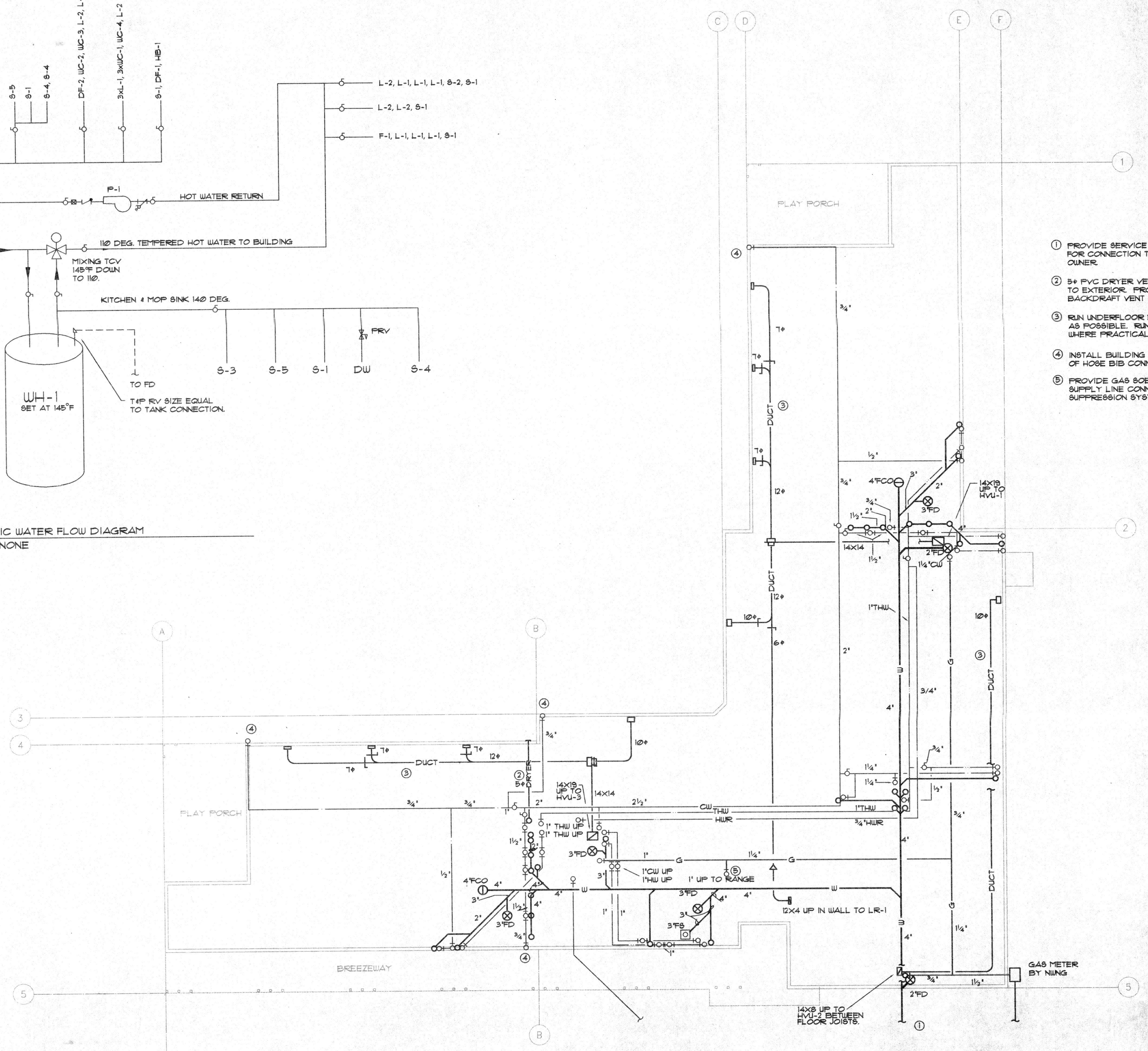

1 / M-2 UNDER FLOOR PLAN
SCALE: 1/8"=1'-0"

1. PROVIDE SERVICE TO 5'-0" FROM BUILDING FOR CONNECTION TO PUBLIC UTILITIES BY OWNER.
2. 5ø PVC DRYER VENT TO EXTERIOR SILL. SLOPE TO DRAIN TO EXTERIOR. PROVIDE ½" INSULATION AND BACKDRAFT VENT CAP AT EXTERIOR WALL.
3. RUN UNDERFLOOR DUCTWORK AS TIGHT TO STRUCTURE AS POSSIBLE. RUN IN SPACE BETWEEN JOISTS WHERE PRACTICAL.
4. INSTALL BUILDING INSULATION ON EXTERIOR SIDE OF HOSE BIB CONNECTIONS TO REDUCE FREEZING.
5. PROVIDE GAS SOELENOID VALVE ON RANGE GAS SUPPLY LINE CONNECTED TO KITCHEN HOOD FIRE SUPPRESSION SYSTEM.

CHRIS BILLINGS & ASSOCIATES
CONSULTING ENGINEERS
4445 S.W. BARBUR BLVD
PORTLAND, OR 97201
PH. (503)228-0008
FAX (503)228-2280

PROJECT:
HEAD START CENTER

WARRENTON/ASTORIA

PROJECT NO.: 95-0030
FILE NO.: HS-M-2.dwg
DATE: JUNE 1, 1995
REVISIONS: DATE: DESCRIPTION:

SHEET TITLE:
FOUNDATION PLAN MECHANICAL

SHEET NO. M-2

REGISTERED PROFESSIONAL ENGINEER 17231 OREGON JULY 19, 1994 JANETTE L. KEERBO

EXPIRES 6/30/95

Mon Jun 12 15:16:49 1995

2 / M-3 UTILITY ROOM DETAIL
SCALE: 1/2"=1'-0"

① MOUNT THIS FIXTURE AT CHILD HEIGHT WITH BOTTOM OF FOUNTAIN AT 24" AFF. SEE ARCHITECTURAL DRAWINGS.

② TEMPERED WATER MIXING VALVE, MOUNTED ON WALL. SET TO DELIVER 110°F.

③ PIPE CD TO FD.

④ PROVIDE RECESSED DRYER VENT BOX W/ CONNECTIONS DN. TO 5" PVC.

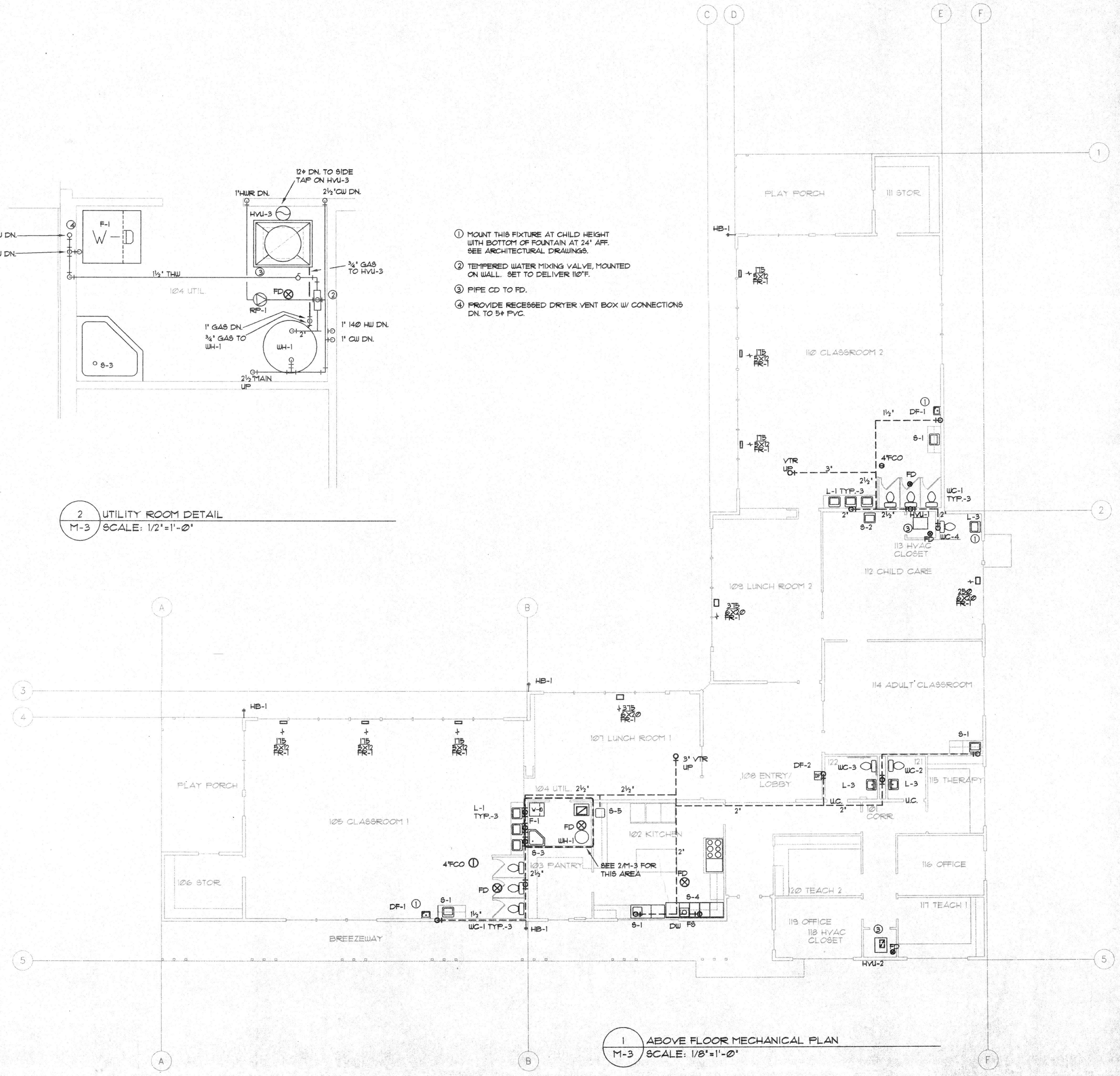

1 / M-3 ABOVE FLOOR MECHANICAL PLAN
SCALE: 1/8"=1'-0"

REGISTERED PROFESSIONAL ENGINEER
13231
OREGON
JULY 19 1994
JANETTE L. KERBO
EXPIRES 6/30/95

CHRIS BILLINGS & ASSOCIATES
CONSULTING ENGINEERS
4445 S.W. BARBUR BLVD
PORTLAND, OR 97201
PH. (503)228-0008
FAX (503)228-2280

PROJECT:
HEAD START CENTER

WARRENTON/ASTORIA

PROJECT NO.: 95-0030
FILE NO.: HS-M-2.dwg
DATE: JUNE 1, 1995
REVISIONS: DATE: DESCRIPTION:

SHEET TITLE:
FLOOR PLAN MECHANICAL
SCALE: 1/8"=1'-0"
SHEET NO.: M-3

Mon Jun 12 15:39:42 1995

GENERAL NOTE:
DUCTWORK ROUTING IS SCHEMATIC. ROUTE AS CLOSE AS POSSIBLE TO THAT SHOWN WITH A MINIMUM OF OFFSETS AND BENDS. PROVIDE ROUTING TO AVOID STRUCTURAL COMPONENTS.

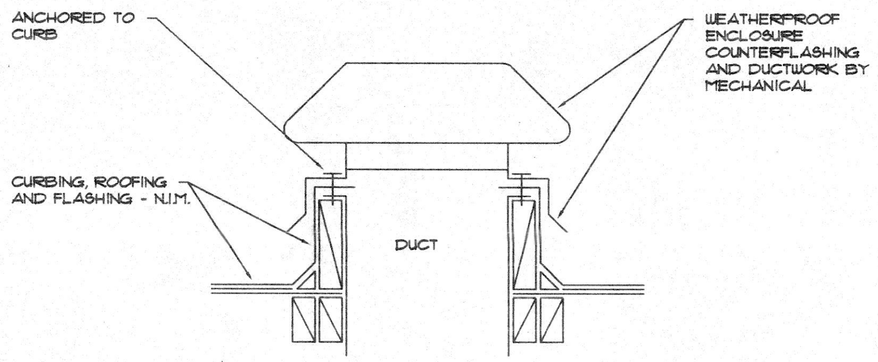

DETAIL - ROOF CAP

NO SCALE

NOTES

1. EXHAUST FAN HUNG FROM STRUCTURE IN ATTIC. POSITION SO THAT SINGLE CEILING TILE PROVIDES ADEQUATE MAINTAINANCE ACCESS. PROVIDE FLEX CONNECTIONS TO DUCTS AND SEISMIC RESTRAINTS.
2. RECTANGULAR TRANSITION TO 16ϕ UP TO REDUCING LATERAL.
3. VENT HVU THROUGH WALL WITH CONCENTRIC VENT KIT LOCATE EXTERIOR TERMINATION AS HIGH AS PRACTICAL.
4. PROVIDE RECESSED DRYER VENT BOX WITH CONNECTION TO 5ϕ PVC DOWN IN WALL.
5. 6ϕ DUCT THROUGH FLOOR TO VENTILATE CRAWL SPACE. TERMINATE BELOW FLOOR INSULATION WITH ¼" SCREEN. 75CFM. FLD AND ACCESS PANEL AT FLOOR.
6. PROVIDE COMBUSTION AIR KIT THROUGH ROOF, LOCATED AS SHOWN. SIZE PER MANUFACTURER'S RECOMMENDATIONS.
7. COMBUSTION AIR DUCT, TERMINATE 10" ABOVE FINISH FLOOR.
8. WH-1 VENT PIPE.
9. KRUEGER 20L BPF MAKE UP AIR INTAKE GRILLE MOUNTED IN CEILING OF WALKWAY.

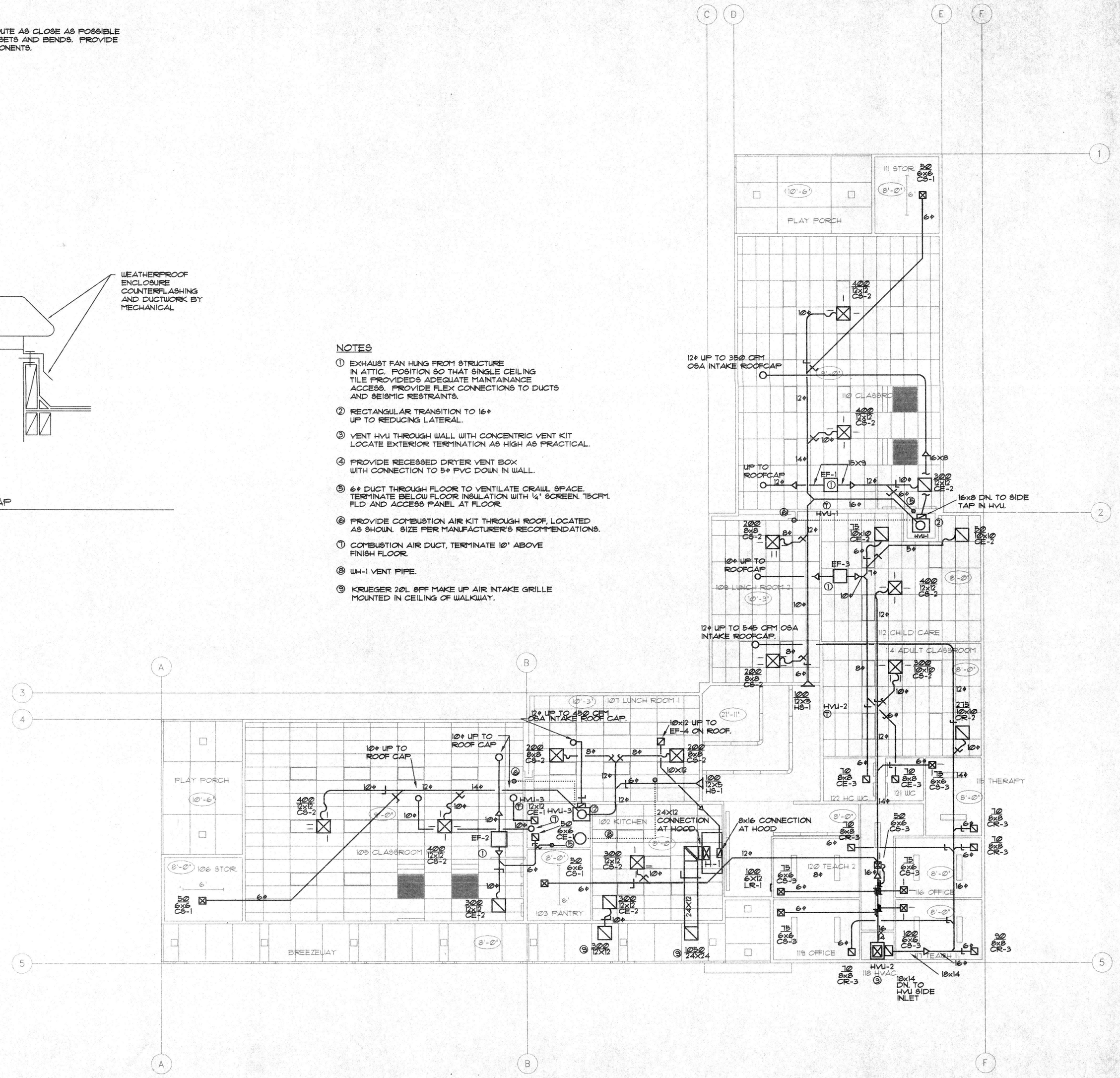

CHRIS BILLINGS & ASSOCIATES
CONSULTING ENGINEERS
4445 S.W. BARBUR BLVD
PORTLAND, OR 97201
PH. (503)228-0008
FAX (503)228-2280

PROJECT: HEAD START CENTER

WARRENTON/ASTORIA

PROJECT NO.: 95-0030
FILE NO.: HS-M-4.dwg
DATE: JUNE 1, 1995
REVISIONS: DATE: DESCRIPTION:

SHEET TITLE: CEILING/ATTIC PLAN HVAC

SHEET NO.: M-4

REGISTERED PROFESSIONAL ENGINEER 17231 OREGON JULY 19, 1994 LANETTE L. KEFRD

EXPIRES 6/30/97

Tue JUN 13 10:06:13 1995

FIXTURE SCHEDULE

A RECESSED TWO LAMP FLUORESCENT FIXTURE WITH ACRYLIC PRISMATIC LENS AND 120V ELECTRONIC BALLAST, LITHONIA #2GPG-232-A12, METALUX #2GP-232-A, CRESCENT #24GP-232A12 OR APPROVED.

B RECESSED FLUORESCENT FIXTURE WITH THREE LAMPS AND ACRYLIC PRISMATIC LENS, 120 VOLT ELECTRONIC BALLAST, LITHONIA #2GPG-332-A12, CRESCENT #24GP332-A12, METALUX #2GP-332-A OR APPROVED.

C WALL MOUNTED FLUORESCENT FIXTURE AT 7'-0" CENTERLINE, TWO 32 WATT T8 LAMPS, 120 VOLT ELECTRONIC BALLAST, UP AND DOWN LIGHT, METALUX #BE-232-120-A OR EQUAL.

C1 SIMILIAR TO TYPE C ABOVE EXCEPT 8 FOOT LONG CHANNEL FOR FIXTURE WITH TWO FOUR FOOT LONG PIECES OF LENSES.

D SURFACE MOUNTED FLUORESCENT STRIP WITH TWO LAMP IN CROSS SECTION, 96 INCHES LONG 32 WATT T8 LAMPS, 120VOLT ELECTRONIC BALLAST, CRESCENT #SCF-232-8, METALUX # 8TSS-232, LITHONIA # 8TC-232 OR EQUAL.

E SURFACE MOUNTED ENCLOSED FLUORESCENT WITH TWO 32 WATT T8 LAMPS, 120V ELECTRONIC BALLAST, ACRYLIC PRISMATIC LENS, CRESCENT #

G WALL MOUNTED FLUORESCENT WITH UP AND DOWN LIGHT DISTRIBUTION, TWO 32 WATT T8 35 K LAMPS, 120 VOLT ELECTRONIC BALLAST, ACRYLIC LENS ON TOP AND BLADE BAFFLE ON THE BOTTOM, COLOR AS SELECTED BY ARCHITECT, PEERLESS #LD6-211751-4 OR APPROVED.

G1 SIMILIAR TO TYPE G ABOVE EXCEPT 96 INCHES LONG, PEERLESS #LD6-211751-8 OR APPROVED.

G2 SIMILIAR TO TYPE G ABOVE EXCEPT 144 INCHES LONG, PEERLESS #LD6-211751-12 OR APPROVED.

H SUSPENDED INCANDESCENT FIXTURE WITH WHITE LAMP ENCLOSURE WITH UP AND DOWN LIGHT 200WATT A23 2000 HOUR LAMP, 12 FOOT LONG WHITE 3 CONDUCTOR CORD WITH STRAIN RELIEF TOP AND BOTTOM, LOUIS POULSON #PH5-210WHITE OR APPROVED.

I SURFACE FLUORESCENT POLYCARBONATE ENCLOSURE WITH ONE 28WATT '2D' LAMP, 120 VOLT ELECTRONIC BALLAST, KENALL #24-30-28 OR EQUAL.

J SUSPEND FLUORESCENT FIXTURE WITH TWO 32 WATT T8 35 K LAMPS AND 120 ELECTRONIC BALLAST, SUSPEND WITH AIRCRAFT CABLE KIT, COLOR TO BER VERIFIED WITH ARCHITECT, LITECONTROL TUBE 6 #P-1-06-28-SPL-120EB OR APPROVED.

K UNDERCABINET LIGHT WITH SWITCH, CRESCENT CU40A WITH ONE T8 LAMP AND ELECTRONIC BALLAST.

PL POST LIGHT, 175 W METAL HALIDE WITH 120 VOLT CWA BALLAST, MCGRAW-EDISON #ZSF1143-1 WITH S415XX POLE, ANCHORS BOLTS AND NUT COVER OR EQUAL.

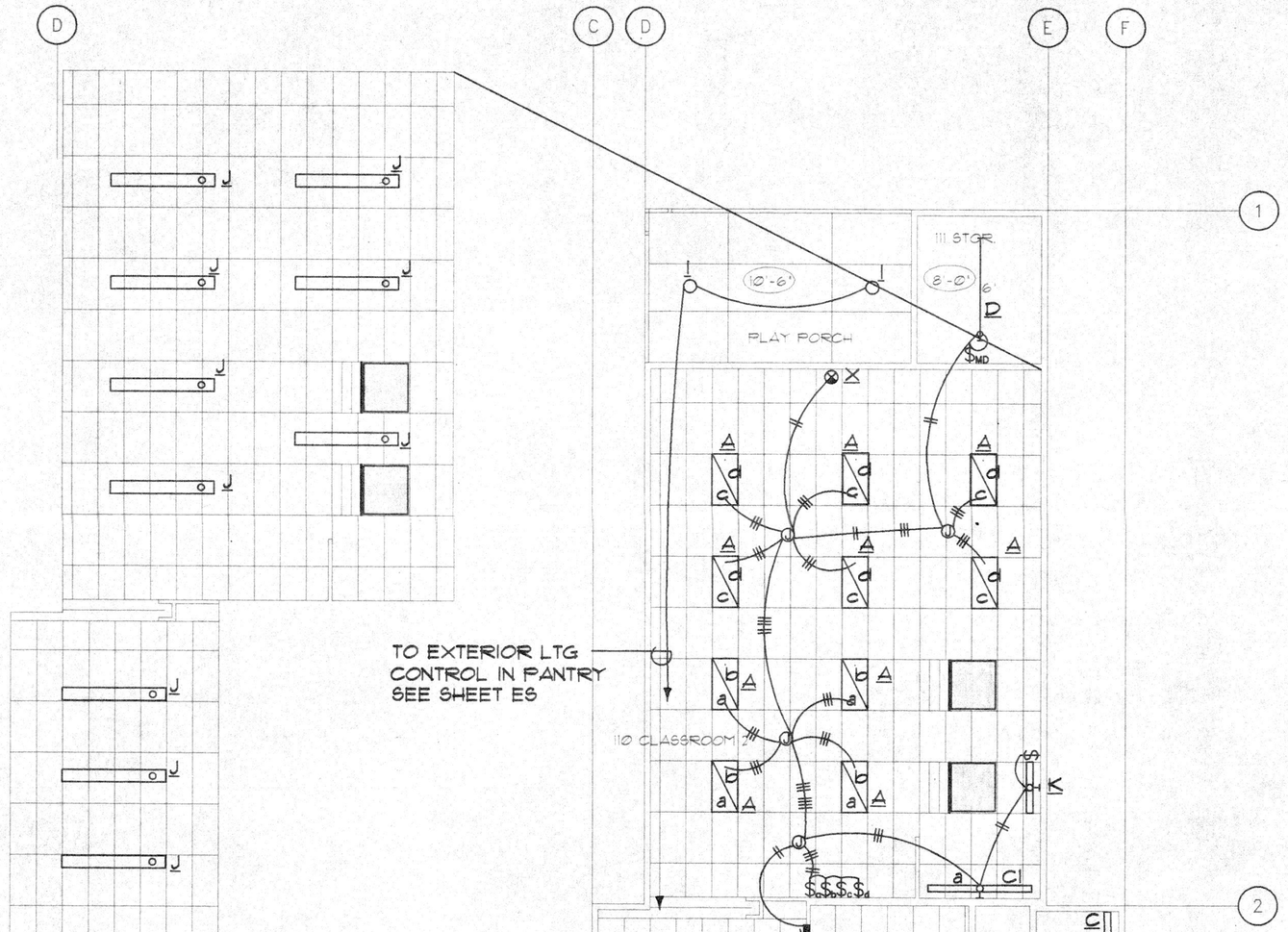

ALTERNATE LIGHTING PLAN

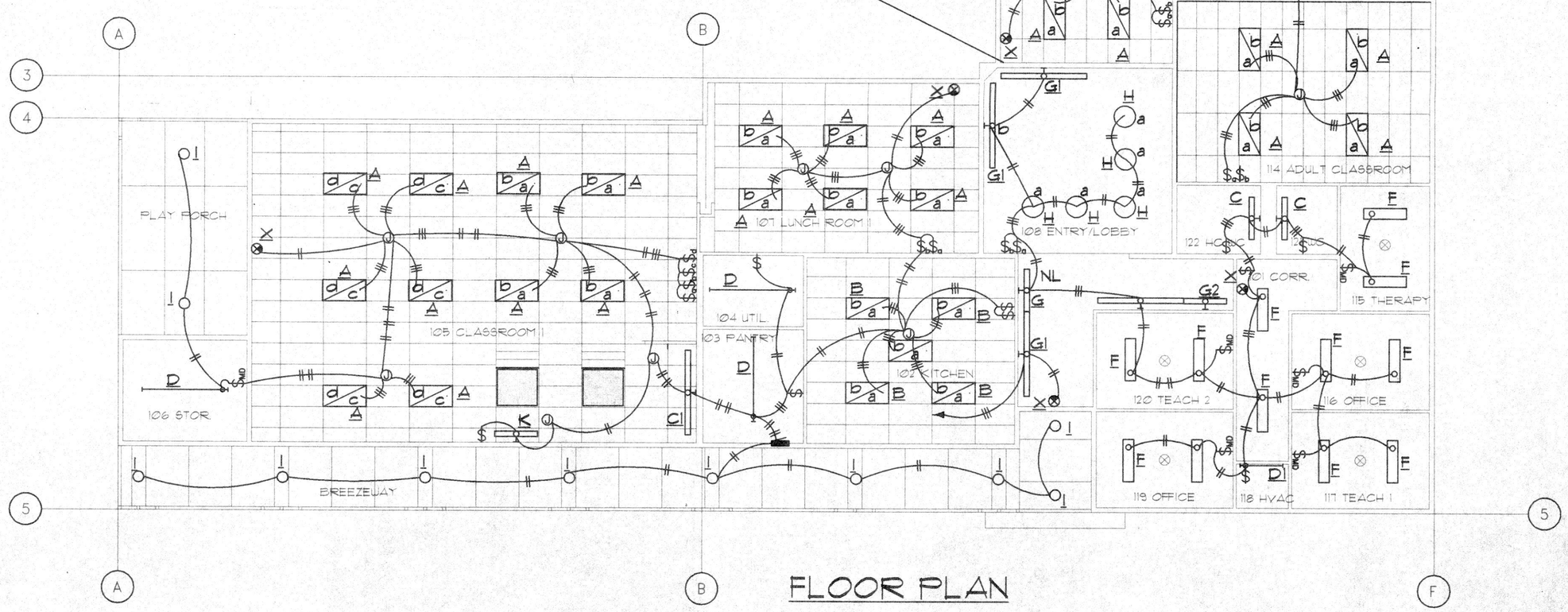

FLOOR PLAN

SYMBOL LIST

- RECESSED FLUORESCENT FIXTURE
- SURFACE OR SUSPENDED FLUORESCENT FIXTURE
- WALL MOUNTED FLUORESCENT FIXTURE
- CANOPY FLUORESCENT FIXTURE
- EXIT LIGHT
- $MD LIGHT SWITCH, MOTION DETECTION TYPE
- $ STANDARD LIGHT SWITCH
- JUNCTION BOX
- FLUORESCENT STRIP FIXTURE

REGISTERED PROFESSIONAL ENGINEER 6239 OREGON JULY 12, 1949 SIDNEY D. NIELSEN

COLUMBIA CONSULTING ENGINEERS, Inc.
P.O. BOX 40088 PORTLAND, OR. 97240 [503] 243-2850

PROJECT : HEAD START CENTER

WARRENTON/ASTORIA
WARRENTON, OREGON

PROJECT NO. : 4314
FILE NO. :
DATE : June 25, 1995

REVISIONS :	DATE :	DESCRIPTION :

SHEET TITLE : LIGHTING

SHEET NO. E1

DETAIL FOR RECEPTACLE ON KITCHEN TABLE

NOT TO SCALE.

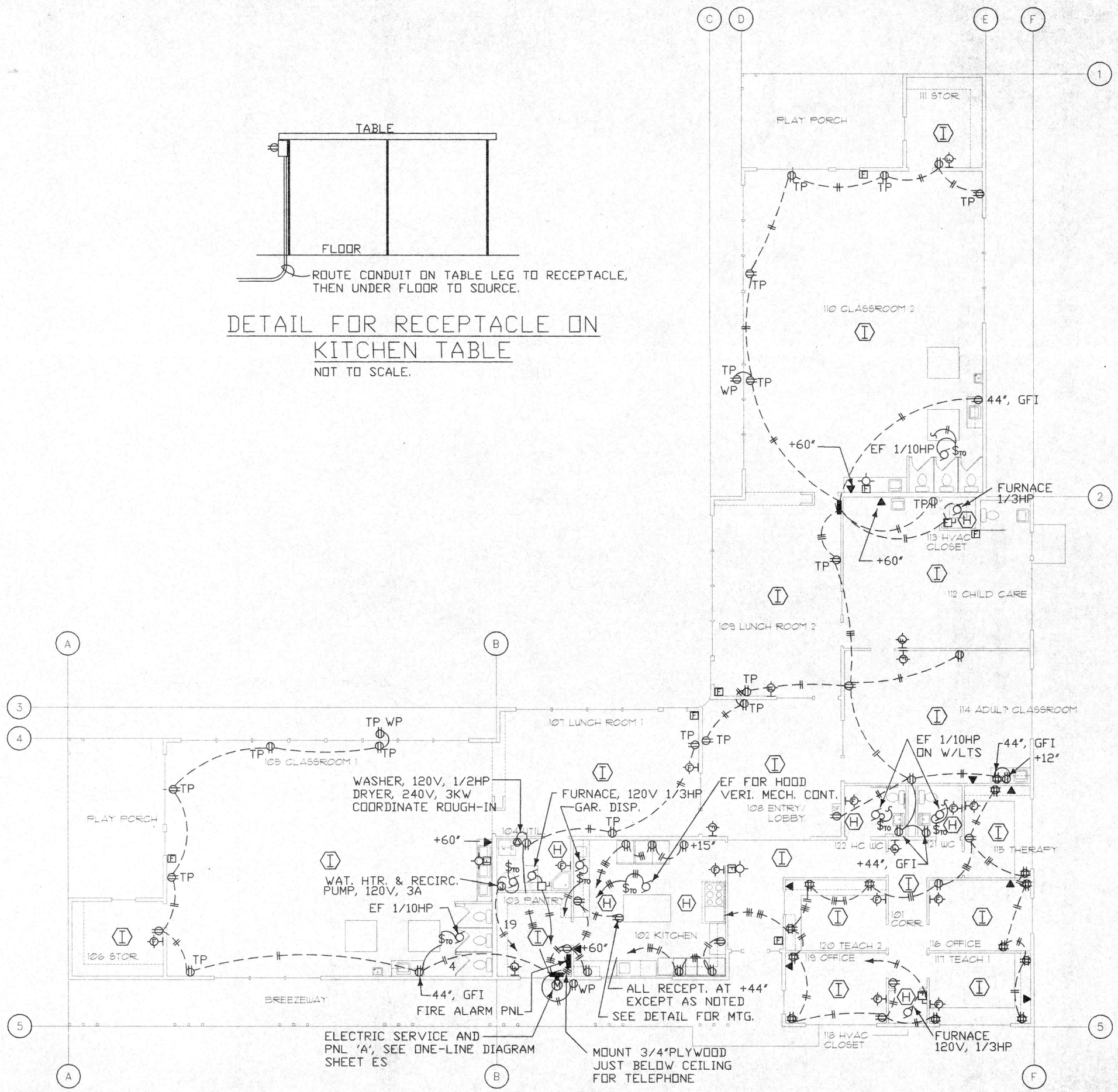

FLOOR PLAN

SCALE: 1/8"= 1'-0"

SYMBOL LIST

- DUPLEX RECEPTACLE, MOUNT AT 15"
- DOUBLE DUPLEX RECEPTACLE, MOUNT AT 15"
- TP TAMPER PROOF
- MOTOR
- DISCONNECT SWITCH, MOUNT AT 66"
- FIRE ALARM PULL STATION, MOUNT AT 54"
- ADA STROBE LIGHT, MOUNT AT 80"
- FIRE ALARM IONIZATION TYPE SMOKE DETECTOR
- FIRE ALARM HEAT DETECTOR
- BRANCH CIRCUIT PANEL
- CONDUIT AND WIRE CONCEALED IN OR BELOW FLOOR
- CONDUIT AND WIRE CONCEALED IN WALL OR CEILING

REGISTERED PROFESSIONAL ENGINEER 6236 OREGON JULY 12, 1988 SIDNEY D. NIELSEN

COLUMBIA CONSULTING ENGINEERS, Inc.
P.O. BOX 40088 PORTLAND, OR. 97240 [503] 243-2850

PROJECT : HEAD START CENTER

WARRENTON, OREGON

PROJECT NO. : 4314
FILE NO. :
DATE : May 25, 1995

REVISIONS :	DATE :	DESCRIPTION :

SHEET TITLE : POWER AND SIGNAL

SHEET NO. E2

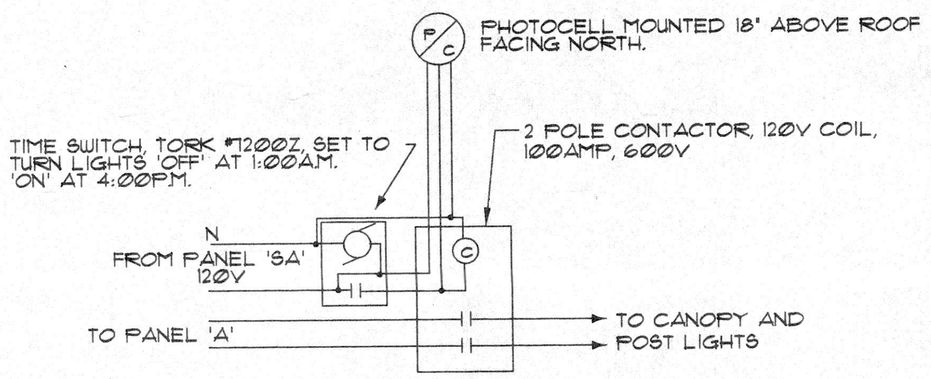

EXTERIOR LIGHTING CONTROL DIAGRAM

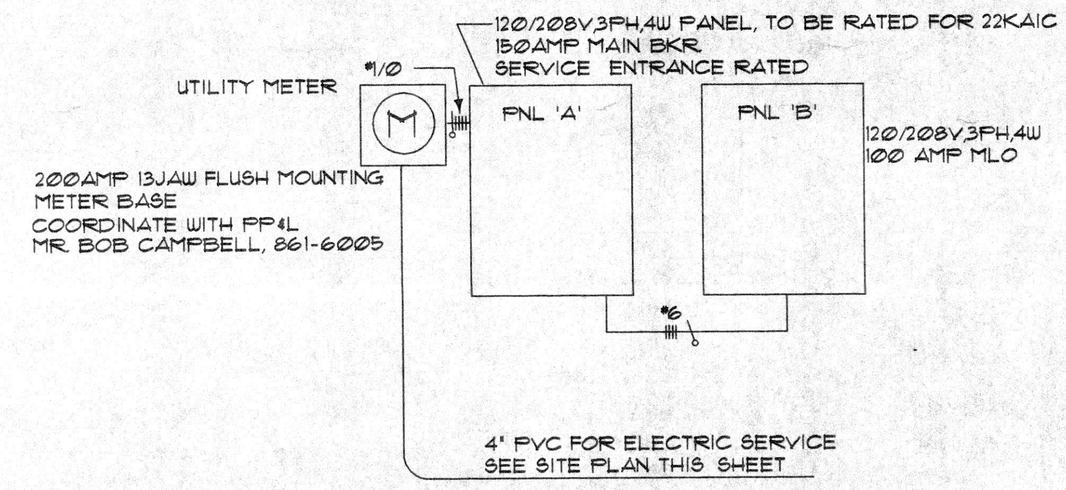

120/240V,1PH,3W ONE-LINE DIAGRAM

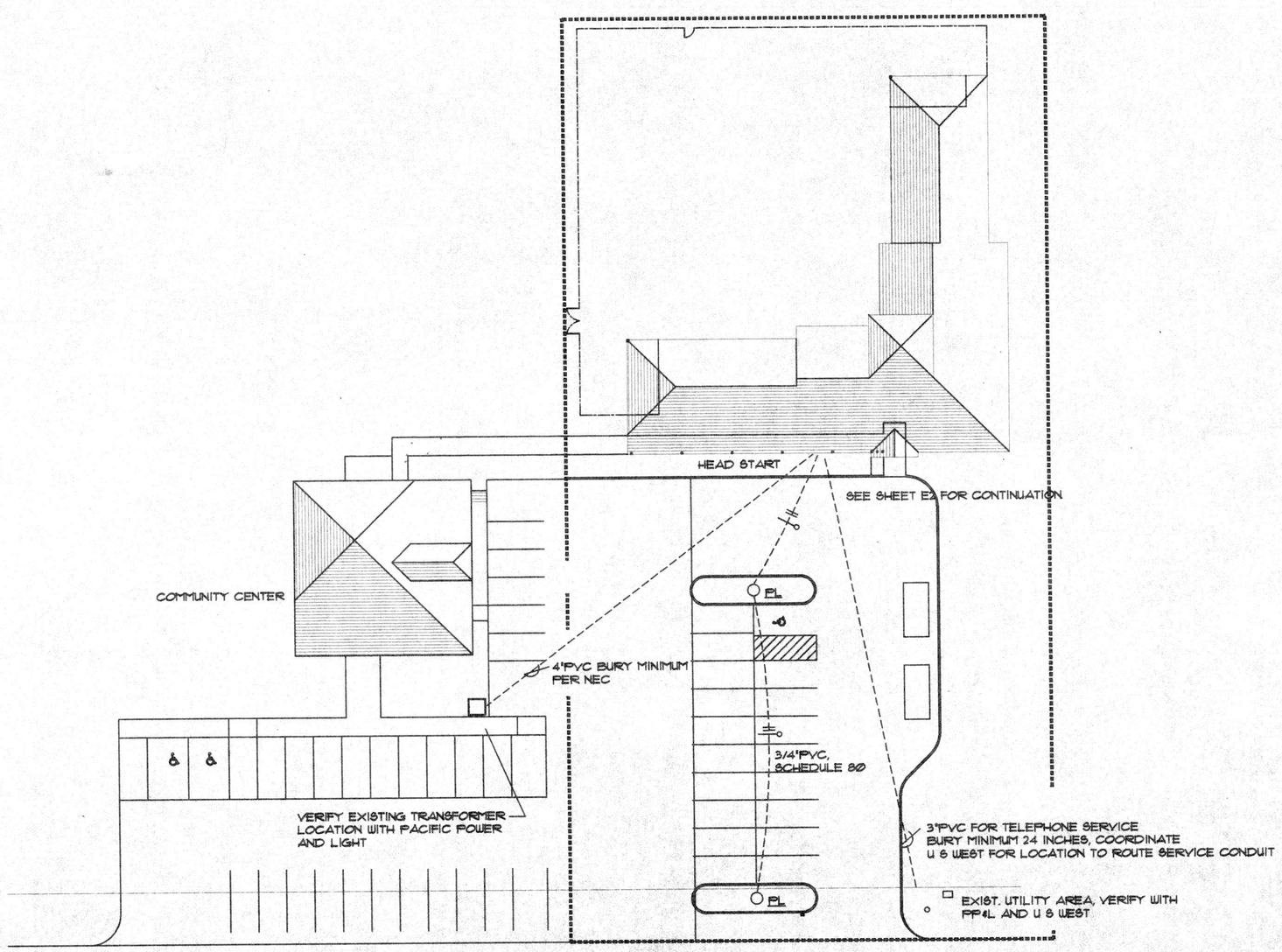

SITE PLAN

SCALE 1"=30'-0"

PANEL 'A' LOCATION ____ ■ GROUND BUS ■ SURFACE MTD. □ FLUSH MTD. VOLTS 120/208V, 3Φ, 4W AMPS 200 ■ MAIN CKT. BKR. □ MAIN LUGS ONLY

NO	SERVICE	P	A	WATTS A	WATTS B	WATTS C	NO	SERVICE	P	A	WATTS A	WATTS B	WATTS C
1	LTG. EXTERIOR	1	20	1000			2	RECEPT. EXTER.	1	20	360		
3	INTERIOR				1612		4	INTERIOR				1260	
5						1302	6						540
7				1248			8	KITCHEN			360		
9	RECEPT. OFFICES				1080		10					180	
11						1260	12						600
13				1260			14				600		
15					1260		16					180	
17	FURNACE					1100	18						180
19	WAT. HTR & PUMP			300			20				180		
21	WASHER				1200		22					180	
23	DRYER	2	20			1750	24	TTB					180
25				1750			26	FIRE ALARM			600		
27	PNL 'B'	3	60		2667		28					600	
29						2667	30	GARBAGE DISPS					400
31				2668			32						
33							34						
35							36						
37							38						
39							40						
41							42						
	PHASE WATTS			8226	7819	8079		PHASE WATTS			2100	2400	1900
	TOTAL WATTS 20524							PHASE AMPS 85					

PANEL 'B' LOCATION ____ ■ GROUND BUS ■ SURFACE MTD. □ FLUSH MTD. VOLTS 120/208V, 3Φ, 4W AMPS 60 □ MAIN CKT. BKR. ■ MAIN LUGS ONLY

NO	SERVICE	P	A	WATTS A	WATTS B	WATTS C	NO	SERVICE	P	A	WATTS A	WATTS B	WATTS C
1	LTG. INTERIOR	1	20	992			2	RECEPT. EXT.	1	20	180		
3					930		4	INTERIOR				1260	
5						1100	6						1080
7	FURNACE			1200			8				1260		
9	SPARE						10	SPACE					
11	SPACE						12						
13							14						
15							16						
17							18						
19							20						
21							22						
23							24						
25							26						
27							28						
29							30						
31							32						
33							34						
35							36						
37							38						
39							40						
41							42						
	PHASE WATTS			2192	930	1100		PHASE WATTS			1440	1260	1080
	TOTAL WATTS 4002							PHASE AMPS 22.2					

REGISTERED PROFESSIONAL ENGINEER 6238 SIDNEY D. NIELSEN JULY 12, 1988

COLUMBIA CONSULTING ENGINEERS, Inc.
P.O. BOX 40088 PORTLAND, OR. 97240 [503] 243-2850

PROJECT : HEAD START CENTER

WARRENTON/ASTORIA
WARRENTON, OREGON

PROJECT NO. : 4314
FILE NO. :
DATE : JUNE, 21, 1995

REVISIONS :	DATE :	DESCRIPTION :

SHEET TITLE : SITE PLAN – ELECTRICAL

SHEET NO. ES

IRRIGATION PLAN

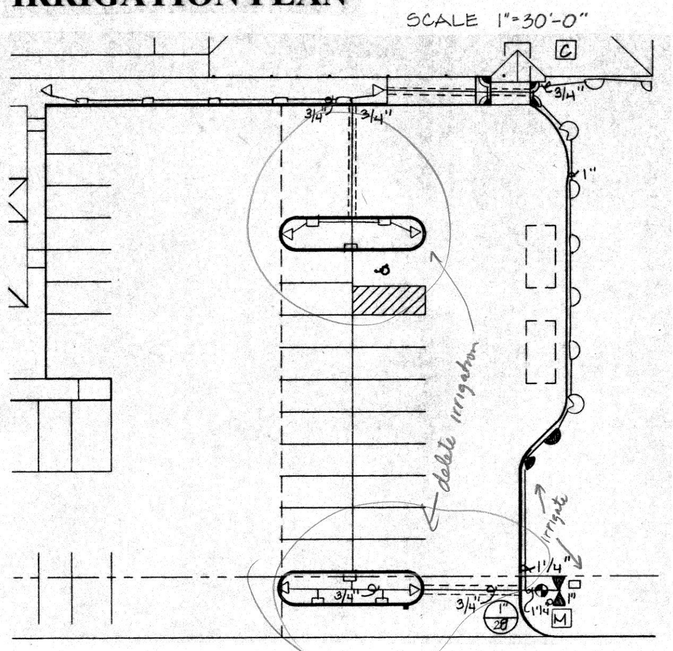

LEGEND

- [M] Existing Water Meter. Location is approximate, verify in field.
- 1" Febco 805Y Backflow Preventer in Ametek #190106 Meter Box with Green CV cover installed per local codes and manufacturers specifications. With a 1" Nibco TI-8 Gate Valve in Ametek 10" Box & Cover. Location is approximate, verify in field.
- 1" Weathermatic 11024 Valve in Ametek #170106 Standard Box & Cover installed per local codes & manufacturers specifications.
- Toro 570Z Series 4-EST-PC
- Toro 570Z Series 9-SST-PC
- Toro 570Z Series 10-Q,H-PC
- Toro 570Z Series15- H,TT-PC
- Toro 570Z Series 5-Q-PC
- [C] CONTROLLER, NELSON 8424 (Controller to be located in field by Landscape Architect.)
- ======= 3" PVC Sleeve

PLANTING DETAILS

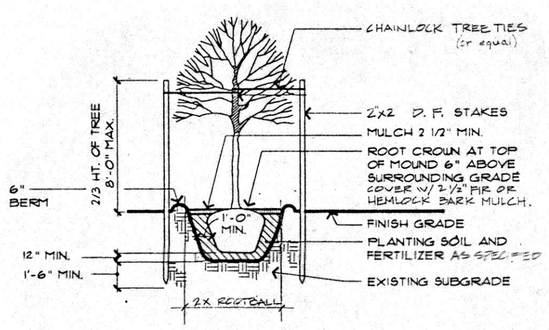

DECIDUOUS TREE PLANTING DETAIL

NOT TO SCALE

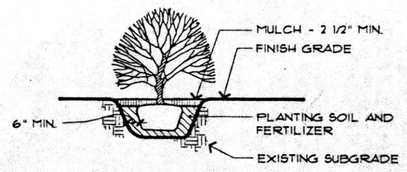

SHRUB PLANTING DETAIL

NOT TO SCALE

GENERAL NOTES:

- THE CONTRACTOR SHALL EXAMINE THE SITE AND FAMILIARIZE HIMSELF WITH ALL CONDITIONS PERTINENT TO THIS WORK.
- IT WILL BE THE CONTRACTOR'S RESPONSIBILITY TO DETERMINE THE LOCATION OF ALL UNDERGROUND UTILITIES AND AVOID DAMAGE TO THE SAME.
- PIPING SHOWN IS DIAGRAMMATIC. CONTRACTOR SHALL ROUTE PIPING TO AVOID CONFLICT WITH EXISTING CONDITIONS OR IMPROVEMENTS.
- ACTUAL FIELD CONDITIONS MAY NECESSITATE ADDING, DELETING, OR MAKING MINOR ADJUSTMENTS IN SPACING HEADS TO INSURE UNIFORM COVERAGE.
- ALL MAINLINES TO BE A MINIMUM OF 18" BELOW GRADE. LATERAL LINES TO BE A MINIMUM OF 12" BELOW GRADE.
- INSTALL 3/4" BRASS MANUAL DRAIN VALVES AT LOW POINTS OR END OF MAINLINES. the VALVES TO BE INSTALLED WITH A VALVE MARKER AND COVER.
- A TRACER WIRE SHALL BE INSTALLED ALONG THE TOP OF ALL PIPING OF NONMETALLIC COMPOSITION, SUCH AS PVC MAIN LINES AND LATERALS. TAPE TO PIPING AT 10-FOOT INTERVALS, WITH STANDARD BLACK 3/4" ELECTRICAL TAPE.
- POINT OF CONNECTION IS SHOWN IN APPROXIMATE LOCATION DUE TO SITE CONDITIONS AND LOCATION OF THE WATER METER.
- ALL SHRUB BED POP-UPS HAVE A 4" RISER AND ALL LAWN POP-UPS TO HAVE A 6" RISER.
- GUARANTEE: ALL MATERIALS AND LABOR USED IN CONSTRUCTION OF THE IRRIGATION SYSTEM SHALL BE FULLY GUARANTEED FOR ONE YEAR BEGINNING AT THE TIME OF ACCEPTANCE BY THE OWNERS REPRESENTATIVE.

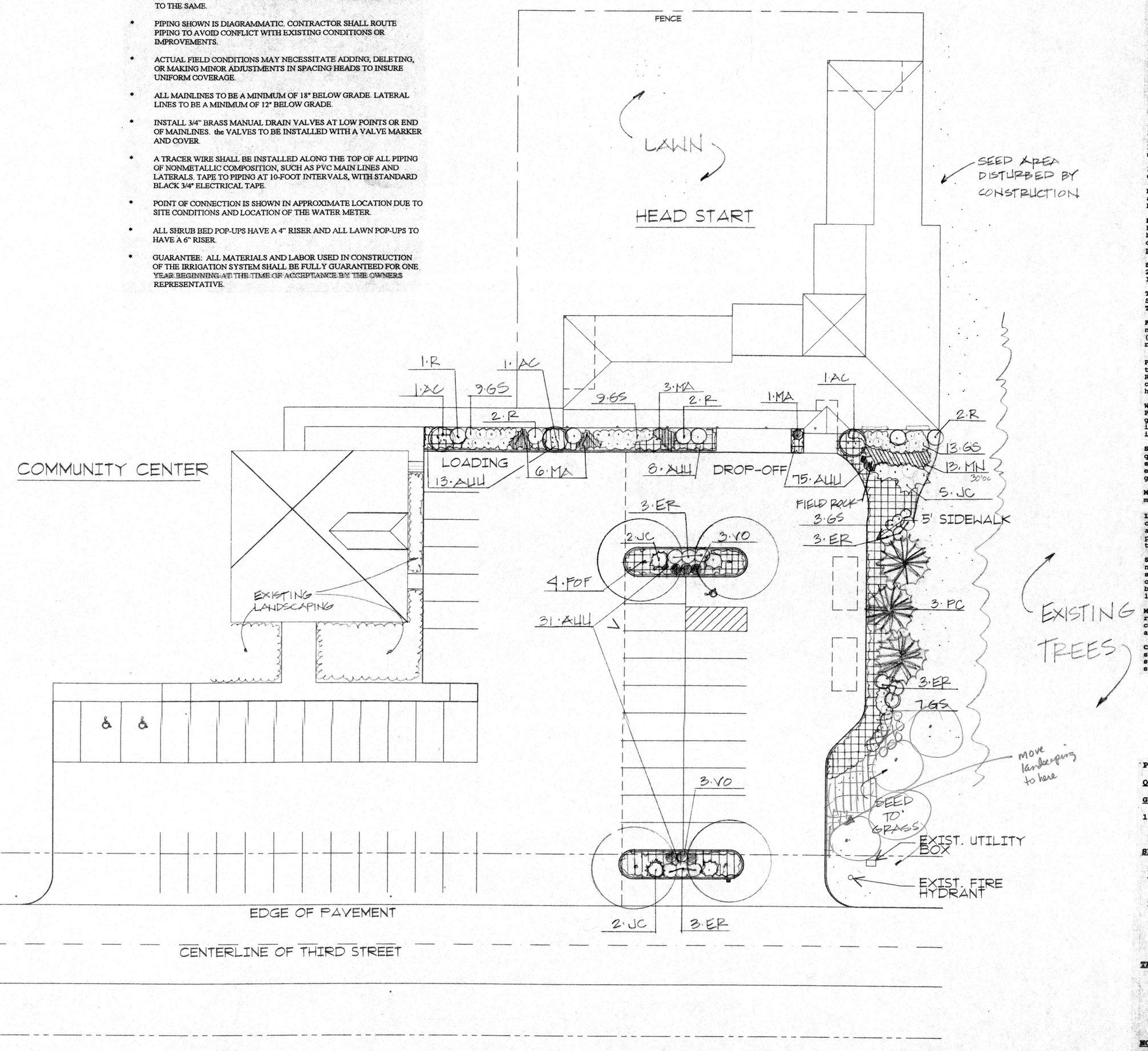

OUTLINE SPECIFICATION - PLANTING AND SEEDING

GENERAL: All plants shall conform to all applicable standards of the latest edition of the "American Standard for Nursery Stock", A.N.S. 1.260.1.

Nursery stock shall be healthy, well branched and rooted, formed true to variety and specie, full foliaged, free of disease, injury, defects, insects, weeds, and weed roots. Trees shall have straight trunks, symmetrical tips, and have an intact single leader.

GUARANTEE AND REPLACEMENT: All plant material shall be guaranteed from final acceptance for one full growing season or one year, whichever is longer. During this period any plant material that is not in good condition and producing new growth (except that material damaged by severe weather conditions, due to Owner's negligence, or lost due to vandalism) shall be replaced by the Contractor.

TOPSOIL AND FINAL GRADES: Contractor is to supply and place 12" of topsoil in planting beds and 6" in lawn areas if topsoil is not conducive to proper plant growth, unless otherwise notified by the General Contractor.

Landscaping shall include finished grades and even distribution of topsoil to meet planting requirements. Grades and slopes shall be as indicated. Planting bed grades shall be approximately 3 1/2 inches below adjacent walks, paving, finished gradelines, etc., to allow for bark application. Finish grading shall remove all depressions or low areas to provide positive drainage throughout the area.

HERBICIDES: Prior to soil preparation, all areas showing any undesirable weed or grass growth shall be treated with Round-up in strict accordance with the manufacture's instructions.

SOIL PREPARATION: Work all areas by rototilling to a minimum depth of 8 inches. Remove all stones (over 1" size), sticks, mortar, large clumps of vegetation, roots, debris, or extraneous matter turned up in working. Soil shall be of a homogeneous fine texture. Level, smooth and lightly compact area to plus or minus .10 of required grades.

In groundcover and lawn areas add 2" (two inches) of mushroom compost or Garden Care (or as approved) and till in to the top six inches of soil.

NOTIFICATION: The Contractor shall notify the Landscape Architect 48 hours in advance of installation of the plants. Final location shall be approved by the Landscape Architect.

PLANTING HOLE: Lay out all plant locations and excavate all soils from planting holes to 2 1/2 times the root ball or root system width. Loosen soil inside bottom of plant hole. Dispose of any "subsoil" or debris from excavation. Check drainage of planting hole with water, and adjust any area showing drainage problems.

SOIL MIX: Prepare soil mix in each planting hole by mixing:
2 parts native topsoil (no subsoil)
1 part Mushroom compost or approved equal.

Thoroughly mix in planting hole and add fertilizers at the following rates:
Small shrubs - 1/8 lb./ plant Shrubs - 1/3 to 1/2 lb./ plant
Trees - 1/3 to 1 lb./ plant

FERTILIZER: For trees and shrubs use Commercial Mix Inorganic 5-4-3 with micro-nutrients and 50% slow releasing nitrogen. For lawn areas use Commercial Mix (22-16-8) with micro-nutrients and 50% slow releasing nitrogen.

PLANTING: Place the plant on a layer of compacted planting mix at the center of the planting hole. Plant trees and shrubs upright and face for best appearance. Remove containers or ties and burlap from the top of B&B plants. Check roots and cut clean any frayed or broken roots. Stagger plants in rows. Backfill planting hole with soil mix while working each layer to eliminate voids.

When approximately 2/3 full, water thoroughly, then allow water to soak away. Place remaining backfill and dish surface around plant to hold water. Final grade should keep root ball slightly above surrounding grade, not to exceed 1 inch. Water again until no more water is absorbed. Initial watering by irrigation system is not allowed.

STAKING OF TREES: Stake or guy all trees. Stakes shall be 2" X 2" (nom.) quality tree stakes with point. They shall be of Douglas Fir, clear and sturdy, stained earth-tone green. Tree ties shall be "Uro-Strait" Tree Ties or approved equal. Guy wires shall be a minimum 2 strand twisted 12 ga. wire, and 2-ply garden hose section.

MULCHING OF PLANTINGS: Mulch planting areas with approved medium grind bark mulch to a depth of 2 inches in ground cover areas and 3 inches in shrub beds.

LAWN: After areas have been prepared as described under soil preparation, float or drag lawn areas to required grades, and insure a smooth, firm and mowable lawn area. Apply commercial fertilizer at 4.5 lbs. per 1,000 sq. ft., lime at 50 lbs. per 1,000 sq.ft., and rake or work into soil surface. Establish an even, fine textured seed bed meeting grades, surfaces and texture.

SEED: General: Bluetag grass seed conforming to applicable State laws. No noxious weed seeds. Submit Guaranteed analysis. Sow seeds with a mechanical spreader at a uniform rate as specified below. Rake seed lightly to provide cover. Seed Mixture: Pro-Time 305 - Shade Mix Lawn Seed Blend (as supplied by Hobbs & Hopkins Ltd. Portland, Oregon, (or approved equal), at 7 lbs. per 1,000 sq.ft.

MAINTENANCE - LAWNS: The lawn areas shall be maintained by watering, mowing, reseeding, and weeding for a minimum 60 days after seeding. After 30 days apply commercial fertilizer at 4.5 lbs. per 1,000 sq. ft. Now and keep at lawn areas at 1 1/2" to 2" height. Remove clippings and dispose off site.

CLEAN-UP: At completion of work all extra material, supplies, equipment, etc., shall be removed from the site. All walks, paving, or other surfaces shall be swept clean, mulch areas shall have debris removed and any soil cleared from surface. All areas of the project shall be clean, orderly and complete.

PLANT LIST

QTY.	KEY	NAME	SIZE	SPACING
GROUNDCOVERS:				
127	AUU	ARCTOSTAPHYLOS UVA-URSI "MASS." (Massachusettes Kinnikinnick)	1 gal.	3'o.c.
13	MN	MAHONIA NERVOSA (Longleaf Mahonia)	2 gal.	2'o.c.
SHRUBS:				
12	ER	ESCALLONIA "APPLE BLOSSOM"	5 gal.	4'o.c.
41	GS	GAULTHERIA SHALLON (Salal)	2 gal.	3'o.c.
9	JC	JUNIPERUS CONFERTA "BLUE PACIFIC" (Blue Chip Juniper)	2 gal.	5'o.c.
10	MA	MAHONIA AQUIFOLIUM (Oregon Grape)	24"	3'o.c.
7	R	RHODODENDRON "SCINTILLATION" (Scintillation Rhododendron)	21"	5'o.c.
6	VO	VACCINIUM OVATUM (Evergreen Huckleberry)	2 gal.	3'o.c.
TREES:				
3	AC	ACER CIRCINATUM (Vine Maple, Min. 4 Stem)	8'	as shown
4	FOF	FRAXINUS OXYCARPA "FLAME" (Flame Ash)	2" cal.	" "
3	PC	PINUS CONTORTA (Shore Pine)	6-7'	12'o.c.

NOTES:

1. CONTRACTOR TO VERIFY ALL PLANT QUANTITIES.

INFORMATION ON THIS DOCUMENT IS NOT APPROVED FOR CONSTRUCTION UNTIL A BUILDING PERMIT HAS BEEN ISSUED.

WARRENTON OTTEN PLOT DATES: 6/1/95 14:14:33

NO.	DATE	REVISIONS

REGISTERED LANDSCAPE ARCHITECT JANET L. OTTEN OREGON

OTTEN & ASSOCIATES, INC. • LANDSCAPE ARCHITECTS
Post Office Box 219 • Beaverton, Oregon 97075 • Phone (503) 644-5066 • Fax (503) 641-3092
11805 S.W. Edgewood Dr. • Suite 105 • Beaverton, Oregon 97005

WARRENTON HEAD START
WARRENTON, OREGON

LANDSCAPE PLAN

DATE 060195	
SCALE 1"= 20'- 0"	PROJ. NO. 0695
DRAWN JLO	CHECKED
SHEET NO L1 OF 1	